ENGINEERING SYSTEMS MONOGRAPH

SUSTAINABILITY AS AN ORGANIZING DESIGN PRINCIPLE FOR LARGE-SCALE ENGINEERING SYSTEMS

by Joel Cutcher-Gershenfeld, Frank Field, Ralph Hall,
Randy Kirchain, David Marks, Ken Oye, and Joseph Sussman

March 29-31, 2004

TABLE OF CONTENTS:

I. Introduction and Overview

II. Sustainability as an Organizing Design Principle

III. Motivating Challenges

IV. Four Illustrative Case Vignettes
   a. Sustainability in a Developing World Megacity: The Mexico City Case
   b. Ford Heritage Sustainable Manufacturing Model
   c. Hierarchy of Levels of Analysis in Automotive Aluminum
   d. Lean Sustainment Initiative (LSI) for the US Air Force: Tracing the Repair of an Aircraft Fuel-Pump

V. Sustainability, Efficiency, Uncertainty, and Adaptation

VI. Conclusion

VII. References

I. INTRODUCTION AND OVERVIEW

Sustainability, defined broadly, should be a core, overarching design principle for complex, large-scale engineering systems.

Overarching organizing design principles are essential for large-scale engineering systems. Organizing principles sit above quantified goals and objectives, as well as the analytic tools and methods utilized to find “optimal” trade-offs among these goals and objectives. For example, efficiency and the mitigation of risk are organizing principles commonly found—either implicitly or explicitly—guiding decisions and action in large-scale engineering systems. In this chapter, we advance “sustainability” as a major organizing design principle for large-scale engineering systems, particularly those involving public investments, a mix of public and private stakeholders, and long-term societal impacts.

Sustainability in this paper is defined with respect to trade-offs among economic development and social and environmental goals. It is a broad concept: “It’s not just the environment and resources anymore.” Systems must be sustainable on environmental dimensions, as well as on dimensions such as economic development, politics, and social equity. In advancing sustainability as an organizing principle, we are making a normative argument, which we will later buttress with case examples and sample field research.

Sustainability is not, itself, an implicit, analytic, measurable property. Instead, it must be approached as an overall design goal. Indicators of unsustainable design may not be immediately observable. Hence, the development of engineering design guides for sustainability requires a systems treatment, including such core considerations as the selection of system boundaries in the design process, the identification of systems stakeholders, and the openness or transparency of this process. When dealing with an organizing design principle for large-scale systems, it is also essential to consider the scale for analysis of sustainability and the interrelationships among various major subsystems (e.g., transportation, energy, environment, urban form, etc.).

The normative tone of this chapter reflects what we see as a need to convince the broader engineering and technical community that sustainability is the community’s responsibility and that it is an important organizing principle for systems design. Persuading some community members will be difficult, given a current strong focus on short-term economic goals, to the exclusion of other goals absent regulation. Engineers often do not consider the broader system or context. Few decision-makers or institutions have sufficiently broad perspective or authority to address sustainability as defined here. Connections between the physical systems and the institutions that “manage” them must be represented and considered. Inherent (and value-laden) trade-offs exist between various facets of sustainability (environmental, economic, social, etc.). The political and economic frameworks tend to emphasize near-term solutions to focused problems, which means that neither the frameworks nor traditional engineering will ensure adequate attention to sustainability.

These realities suggest not only that the perspective of engineering systems is critical to promoting sustainability, but that the question of where system boundaries are drawn is of primary importance. Sustainability is strongly related to the ability to replenish or retain key characteristics, resources or inputs, or evaluative criteria over time. Whether those characteristics, resources, or criteria are considered to be within or external to the system matters a great deal in terms of the perspective and role that decision-makers and institutions have in matters.

A focus on sustainability surfaces many motivating challenges for engineering systems as a field, including the following questions:

> With the rise in population, resource consumption, industrialization, and globalization, the importance of sustainability has increased. How do we enhance sustainability if we cannot directly measure it, and how do we change engineers' perspectives in order to accomplish this?

> How can we redesign existing unsustainable engineering systems (transportation, etc.) so as to continue meeting current needs without sacrificing future ones?

> How do we integrate notions of sustainability into everyday engineering activities (fostering a sustainability mindset)?

> How do we integrate sustainability into our educational program?

> Is this a top-down (e.g., setting of national goals to be implemented) or a bottom-up problem (e.g., refinement of production/process design to maximize sustainability)? We will argue here it is both.

> Are there core engineering systems methods for gaining a better understanding—both qualitative and qualitative—of the impact on sustainability of decisions in the systems under investigation?

Four case vignettes presented in this chapter illustrate different dimensions of sustainability and different types of analysis. These cases indicate how sustainability might be used as an organizing design principle, both from the top down (such as with government strategy) and from the bottom up (such as with the selection of design goals in manufacturing, and with procurement and organizational architecture).

Sustainability in a Developing World Megacity: The Mexico City Case. The case considers sustainability and all aspects of improving urban air quality in one of the largest and most polluted megacities of the world, without draconian cutbacks on mobility, with negative impacts on needed economic growth. This case is distinctive in presenting an analytic framework that guides analysis and action on complex, large integrated open systems. (CLIOS)

Ford Heritage Sustainable Manufacturing Model. This is a case of a voluntary, private-sector approach for achieving sustainability in aspects of manufacturing that expand the scope of the concept, including facility design, manufacturing operations, stakeholder relations, and an underlying mode of thought. This case is distinctive in illustrating an inductive approach for the preliminary identification of potential new dimensions of sustainability.

Hierarchy of Levels of Analysis in Automotive Aluminum. Experience with materials research shows that a broadening in the scope of engineering problems requires a broadening in the scale of the system taken into consideration when developing design/development guides. As this scope expands, a hierarchy of analysis can be developed to establish effective tools for improved engineering design. This case is distinctive in illustrating a deductive approach to assessing shadow prices and other dynamics driving sustainability in a complex engineered system.

Lean Sustainment Initiative (LSI) for the US Air Force: Tracing the Repair of an Aircraft Fuel-Pump. Organizations making procurements of large-scale, very long-lived products such as aircraft or infrastructure must move beyond simple concepts of life-cycle analysis. Over long time periods, it is important to switch to an idea of sustainment in which the firewall between procurement/acquisition and long-term use is breached and the feedback loops between long-term use and initial product design are better understood. These concepts are addressed through a focus on a particular aircraft component over its life cycle. This case is distinctive in surfacing connections between sustainability as a domain and research on information flow in organizations.

Each case is a summary of separate research or data collection that was part of separate projects. In that sense, the cases stand on their own. They illustrate an appropriately diverse spectrum of methods and analytic approaches to sustainability. Ultimately, we see in all of the

cases that sustainability is as a core “mode of thought,” as well as a set of specific practices and applications—all essential to understanding sustainability as an organizing design principle for complex engineered systems.

II. SUSTAINABILITY AS AN ORGANIZING DESIGN PRINCIPLE

In 1987 the World Commission on Environment and Development (WCED, also known as the Brundtland Commission) developed what has since become the most widely accepted general definition of sustainable development.

> "Humanity has the ability to make development sustainable – to ensure that it meets the needs of the present without compromising the ability of future generations to meet their own needs." (WCED 1987, 8. This is also known as the Brundtland definition.)

The acceptance of the Brundtland definition is due, in part, to its simplicity. People of all nations are able to understand the definition since it is easy to relate to their current needs and the future needs of their children, grandchildren, and generations beyond. Unfortunately, when translating the concept of sustainability to complex systems, the simplicity of the Brundtland definition does not provide clear design, management, policy, and legislation directions for decision-makers and stakeholders. Hence, the practical application of the Brundtland definition has spawned much discussion centered on the concept of sustainability, particularly in relation to what are termed the "ilities" used to describe system attributes, such as reliability, stability, flexibility with respect to future unknown outcomes, compatibility, and survivability (Marks 2002).

If we consider the extensive literature on the *principles* of sustainability, we see that virtually all the major international organizations[1] have invested significant resources studying the question of how engineering systems could be made more sustainable. These concepts are commonly categorized under what is known as the "*Three E's*" (environment, economy and equity) of sustainability.[2] Using the transportation field as an example, Table 1 provides a summary of these principles identified during a review of the concept of sustainable transportation (Hall 2002). This study suggested a fourth category to house those concepts directed towards transportation *institutions*. We believe that this institutional category will be needed for a broad class of socio-technical systems.

---

[1] Such as the United Nations (UN), World Bank, Organization for Economic Cooperation and Development (OECD), and the World Business Council for Sustainable Development (WBCSD), and several nations (e.g., the United States, Canada, the United Kingdom, and the European Community—a list that represents the nations reviewed and not therefore intended to be all inclusive).

[2] The term the "Three E's" was first used in the mid 1970s in discussions on the topics of the *economy*, the *environment*, and *energy*. During the 1990s, energy became an intrinsic part of the environment (as can be seen from the definition of sustainable transportation presented in the proceeding text), and was replaced by *equity* (or ethics) as society gradually became aware that a movement towards a sustainable future could not occur without a transformation of individual priorities and values (Kidder 1990). The notion was that the environment and the economy depend on our ethics—our sense of right and wrong—and that incorporating ethics into decisions might begin to alter the past objectives of growth, accumulation, and excess towards new objectives of sustainability, sharing, and restraint. Therefore, a more accurate phrase for the twenty-first century might be the "Four E's" of *economy*, *environment*, *energy*, and *equity*. Another popular formulation is in terms of the "Three P's," which are sometimes stated as *people, planet*, and *prosperity.*

Environment	Economy	Equity	Institutional	
Ability to Recycle; Assimilative Capacity; Avoidance of Irreversibility; Precautionary; Preventive; Regenerative; Stewardship; Substitutability; Use of Energy	Affordability; Cost-effectiveness; Cost Internalization; Economic Growth; Economic Well-being; Effective Use of Innovation; Quality of Life	Access & Choice; Equitable Economic Growth (Share the Gains) Environmental Justice; Poverty Reduction; Social Well-being; Social Responsibility	Appropriate Use of Land & Resources; Comprehensive & Long-term Planning; Goals, Performance, and Outcomes; Improvement in Efficiency; Integration; International Cooperation	Protection of Health & Safety; Participation & Education; Reduction of Automobile Dependency; Technological Innovation; Transparency & Accountability

E **E** **E** — The Three E's of Sustainable Transportation

"I/C" — "I/C" for System Innovation/Change

Table 1: Principles of Sustainable Transportation

The concept of sustainability has broadened substantially. It is not simply "the environment and resources," although these factors, the seminal construct, remain of fundamental importance. Now sustainability includes the notion of economic growth needed to retain the political and social support for sustainability. Further, from an ethical viewpoint, equitable sharing of economic gains and environmental justice are concepts at the heart of "modern" sustainability. While there is consensus on the multidimensionality of sustainability, our question is often one of trading off these different dimensions of sustainability.

With this broader definition, *we assert that sustainability should be the overarching design goal for engineering systems*. These systems are driven by technological innovation and *system changes* often need to be accompanied by *institutional change* to achieve the goal of sustainability.

Since we consider sustainability a broad concept, which extends beyond the environment to include dimensions of economic development, politics, society, equity, education, and employment, a strong case can be made that sustainability is inherently a *systems issue*. Hence, decisions about system representation and boundaries will play an important role in capturing the dynamics of the system under analysis. The future development of engineering systems should ensure that improvements in one industry sector do not inadvertently create unsustainable trends in other sectors. Hence, concepts such as feedback loops and stocks and flow become particularly important components of analysis for large-scale systems (Sterman 2002).

Such a holistic approach to sustainability presents a major challenge; many of the problems identified by a broad systems analysis are likely to lie partly inside and partly outside the control of those responsible for system investment and operating decisions. The system changes required—in both physical systems and institutional frameworks—to address critical problem areas are likely to cut across industry sectors and government departments, and few decision-makers are likely to have a sufficiently broad perspective or the authority to manage necessary change. And it may be problematic to maximize equity together with economic development.

It is argued that governments and institutions will play a key role in transitioning the transportation sector (for example) towards a more sustainable state, and, without government leadership, the

transportation sector may not undergo the change necessary to counteract the negative impacts associated with the predicted growth in transportation demand. At the same time, sustainability must be recognized as a strategic goal in the private sector as well, as discussed in the Ford vignette later in this chapter. Clearly, achieving sustainability will need to be a joint venture of the public and private sectors.

The various *definitions* of sustainable transportation are illustrative of the intersectoral issues we face in achieving global sustainability. These definitions highlight that the international transportation community has reached consensus that sustainability can be defined under the Three E's of sustainable transportation (Hall 2002). An example of a useful and internationally accepted definition of sustainable transportation was put forward by the OECD as part of their Environmentally Sustainable Transport (EST) project:

> "A sustainable transport system is one that:
> - provides for safe, economically viable, and socially acceptable access to people, places, goods, and services
> - meets generally accepted objectives for health and environmental quality (e.g., those concerning air pollutants and noise put forward by the World Health Organization (WHO))
> - [in the context of the transportation sector,] protects ecosystems by not exceeding critical loads and levels for ecosystem integrity; for example those adopted by the United Nations Economic Commission for Europe (UNECE) for acidification, eutrophication, and ground-level ozone
> - [in the context of the transportation sector,] does not aggravate adverse phenomena such as climate change, stratospheric ozone depletion, and the spread of persistent organic pollutants" (Caid et al. 2002, 220).

The EST definition supports the Three E's of sustainable transportation; however, the definition is *transportation-centric*. It stops short of connecting the transportation sector to the issues that arise as a result of its "*use*", such as over-consumption and the rapid global use of natural resources. One reason to exclude the stocks and flows of freight and people from the definition is that these factors are controlled mainly by the free (global) market—i.e., it is not the transportation sector's *responsibility*. Thus, it can be argued that *a system boundary is drawn at the very point where the problem becomes too difficult to be addressed by—or simply not of current concern to—the transportation community* (Hall and Sussman, 2003). The system boundary is constructed by the institutions developed to manage our physical[3] and social[4] systems. Hence, excluding important concepts of sustainable development from sector-specific definitions as a result of "enforced" system boundaries may result in a series of solutions which, while sustainable *within* the system boundary, may lead to unsustainable activities in other sectors. While we illustrate this with the transportation system, this same argument is similarly important in other sectors (e.g., energy, agriculture, etc.).

---

[3] Physical systems relate to both natural and man-made systems and to the mechanisms through which they interact. A stable *natural* system provides the resources that humans and all other species need for survival. A stable *man-made* system (such as the transportation system), while it, too, might provide resources and access to resources for the survival of humans and other species, facilitates societal interactions.

[4] Bull (1977) describes how society provides people who have common traditions, institutions, and collective activities and interests with the opportunity to come together to give support to and be supported by each other as a means of ensuring the continued existence of their quality of life—such collective organization represents a *social system*. Humans have evolved to be highly dependent on their societies, and therefore it is important to assess the impact that decisions made by the transportation sector are likely to have on social systems.

We can extend this type of analysis to a broad range of what can be termed complex, large-scale, integrated, open systems (CLIOS). Section IVa presents such a case dealing with air quality issues in Mexico City. Here, we call a system *complex* when it is composed of a group of related units (subsystems) for which the degree and nature of the relationships is imperfectly known. Its overall behavior is difficult to predict, even when subsystem behavior is readily predictable. Further, the time scales of various subsystems may be very different (for example, land-use changes for transportation systems take place over a longer time period than operating decisions). The authors define *large-scale* systems as those which provide important services to humans—such as the transportation, energy, water supply, and communication systems. CLIOS have impacts that are *large* in magnitude, and often *long-lived* and of *large-scale* geographical extent. Subsystems within CLIOS are *integrated* and closely coupled through feedback loops. By *open*, we mean that CLIOS explicitly include social, political, and economic aspects. Often CLIOS are counterintuitive in their behavior. At the least, it can be very difficult to develop models that will predict CLIOS' performance. We define an *engineering system* as a CLIOS with an important technology component.

"Nested complexity," wherein we have a complex physical system operating within the context of a perhaps equally complex institutional system, is a key element of these complex systems.[5] The interplay between the physical and institutional systems creates situations of daunting complexity with regard to sustainability. The concept of CLIOS is not just a form of classification, but a process for understanding complexity, for analysis and for intervention. By using this approach and considering both physical and institutional strategic options, decision-makers, stakeholders, and technocrats are more likely to create strategies that will address unsustainable trends that are occurring within and across engineering systems that range from the global to local levels.

This nested approach suggests that our physical systems need to be represented and analyzed within the policy sphere which surrounds them. Understanding how the policy sphere can influence physical systems is critical to developing robust strategies for system change (Dodder et al. 2004). By including government/institutions, we will be able to consider the politics behind issues, which tend to focus attention on near-term solutions to more well-defined problems, as opposed to taking the more holistic and strategic view. The creation of new tools/methodologies to identify, represent, and analyze physical systems within their policy context will lead to new ways of addressing the inherent, value-laden trade-offs that exist between the various facets of sustainability.

This suggests a growing need to convince the broader engineering and technical community that *sustainability is an important professional issue*. It is an important organizing design principle. At present, few engineers are trained to consider the broader system or context; the creation of new approaches to address unsustainable activities and the integration of these concepts into educational programs will be major steps forward.

Sustainability is not an end-state or system target; neither does it necessarily have an explicit/analytic/measurable property. Therefore, it must be approached as a *design goal*. A problem is that indicators of poor design are not immediately observable. The challenge, therefore, is to use a systems approach to construct guidelines that facilitate sustainable design. In practice, we are often faced by short-term pressures (e.g., to be the lowest bidders) that constrain the long-term view needed for sustainability to be achieved (see Section IVb on the Ford case).

In addition to system design, the notion of *system change* needs to be applied to the planning (Table 2) and operation of engineering systems as well. By focusing on system design, planning, and operations, the definitions of sustainability developed for each CLIOS will ultimately need to balance trade-offs among economic development and social and environmental goals. We

[5] Refer to the vignette on "Sustainability in a Developing World Megacity: The Mexico City Case," for a more detailed explanation of the notion of "nested complexity."

believe sustainability is the quintessential large-scale systems question, and it is the critical design goal for a complex engineered system.

AGENDA	Competitiveness	Environment	Employment
Current	Improve performance/ cut costs	Control pollution/make simple substitutions or changes; conserve energy and resources	Ensure supply of adequately trained people
Sustainable	Change nature of meeting market needs though radical or disrupting innovation (a systems change)	Prevent pollution through system changes; change resource and energy dependence	Radical improvement in human-technology interface (a systems change)

Table 2: Current Planning Agenda vs. Sustainable Planning Agenda[6]

So far we have discussed engineering systems and institutions; however, equally important are the enabling technologies that form the engineering systems. As we face an increasingly global economy, fundamental organizational and political changes, and the advent of ever more advanced technologies, the development of methodologies that allow us to understand and manage complex engineering systems becomes increasingly critical. One of our core objectives will be to perform research at the interface of technology and institutions, with the ultimate objective of developing a new cadre of professionals capable of addressing the most pressing socio-technical challenges society has to face.

[6] This table was extracted from Ashford et al. (2002).

III. MOTIVATING CHALLENGES

Next we present four motivating challenges that support our assertion that system change is needed for many complex engineering systems to achieve sustainability.

THE IMPORTANCE OF SUSTAINABILITY

With the global population expected to reach 9 billion by 2050, with much of the growth in the developing world, global resources required to support the growing needs of humans are likely to face severe shortages. In this light, the development of engineering systems that do not lead to unsustainable human activities is vital.

During the next fifty years, our physical and social systems will play a critical role in sustaining the well-being of developed nations and will be essential for the development of industrializing nations. Without critical support systems (transportation, telecommunications, energy distribution, etc.), societies will not be able to function effectively—i.e., communicate, trade, establish relationships, have a common set of rules for relating to one another, and share in the working of common institutions (Bull 1977). In addition, without access to resources and markets, economic growth is limited, and poverty reduction will not be accomplished. Major problems are creating 1) proper incentives to induce sustainable behaviors and 2) the “lens” that tell us whether we have appropriately met our own (expanding) sense of societal and individual needs.

Implicit in the Brundtland definition, the key indicator that determines whether sustainability has been achieved is whether society and individual needs have been met without irreversible damage occurring to social or physical systems. If we assume a person’s well-being is closely associated with the attributes that accompany industrialization—i.e., the ability of the individual to achieve economic and hence material wealth—we find ourselves in a situation where the drive to satisfy our own needs is leading us down a “self-reinforcing” unsustainable path of increasing *resource throughput* and hence *increased consumption* (some would say over-consumption). The more we have, the more we need to satisfy our own needs.

The growing desire of developing nations to attain the quality of life seen in industrialized nations is creating a worrying trend in resource utilization. Durning (1994) provides a valuable discussion of the issues surrounding the predicted increase in levels of consumption by industrialized and, more importantly, industrializing nations. Specific attention is given to the impact of the “consumer class” and how the soaring consumption rates that track the rise of the consumer society are, from another perspective, indicators of surging environmental harm. The above discussion leads us to conclude that industrialization and the growth in resource consumption will ultimately raise the importance of sustainability in national and international arenas.

A TOP-DOWN OR BOTTOM-UP APPROACH?

A valid question to consider when conceptualizing sustainable development is whether to select a top-down or bottom-up approach to address the problems raised by unsustainable activities. Those in support of the former argue that the establishment of a national (or even an international) framework to achieve the goals of sustainable development (focusing on goals, strategies, policies, and legislation) is essential if sectors—led by their institutional missions—are to be able to take decisive steps towards sustainability. The importance of a national policy framework for sustainable urban travel was one of the major recommendations put forward in the European Conference for Ministers of Transport (ECMT) report (2001) on implementing sustainable urban travel policies. Those in support of the latter approach argue that existing

systems/processes should be redesigned to maximize sustainability. We believe that both approaches are necessary if tangible transitions towards sustainability are to be realized.

INTEGRATING THE NOTION OF SUSTAINABILITY INTO EVERYDAY ENGINEERING ACTIVITIES

Fostering a sustainability mindset among the professionals of the future is important if we are to make progress in addressing unsustainable activities. The question is how to integrate the concept of sustainability into everyday engineering activities and assure that the engineer's clients are in concert with the sustainability goal.

Widening the scope of traditional engineering education is clearly one option, as is the creation of research programs and courses designed to tackle specific problem areas in a holistic manner. No matter which approach is chosen, the ability of an engineer to envision future scenarios will play a crucial role in designing systems that are robust and flexible, able to operate effectively in unpredictable environments.

Taking a strategic approach to system change—both technological and institutional—is essential; the creation of methodologies that encourage researchers/teachers to take a long-term view is likely to begin to foster a sustainability mindset. The ultimate goal is to ensure the notion of sustainability becomes a natural way of addressing system design issues.

INTEGRATING SUSTAINABILITY INTO OUR EDUCATION PROGRAMS

One of the most challenging questions that institutions of higher learning face is how to best integrate sustainability into our educational programs. There is a clear need to re-examine our curricula and research agendas to identify whether we are educating professionals capable of designing sustainable systems and undertaking research that will lead to achieving sustainability. As we push up against the economic, environmental, social, and political constraints of our current systems, engineers, as "problems solvers," will need to have access to knowledge and tools that enable them to find ways to identify sustainable system transformations.

The creation of flexible structures that enable faculty members to work outside of traditional departmental boundaries will be one important way to achieve this. The Engineering Systems Division at MIT is one organizational model in which academic programs such as the Technology and Policy Program, the Leaders for Manufacturing Program, the System Design and Management Program and the Master's of Engineeriing in Logistics Program all with different perspectives but all concerned with multidimensional sustainability, coexist and cross-fertilize.

The notion of an integrative interdisciplinary educational model is central to teaching sustainability in its multidimensional form, but this interdisciplinary approach is often counter-cultural, especially in engineering schools, where drilling down deeply into the discipline—the engineering science approach—is highly valued. A more horizontal integrative approach to alter the mix of what students learn will be essential if they are to contribute professionally in a world where sustainability is the overarching design principle for the CLIOS that we seek to change.

With Sections I, II, and III setting the philosophical stage for our views of sustainability and how to achieve it, we proceed to illustrate several perspectives with four vignettes.

IV. FOUR ILLUSTRATIVE CASE VIGNETTES

To help illustrate various sustainability mindsets, we present four vignettes elaborating the breadth of the concept, which are:

A. Sustainability in a Developing World Megacity: The Mexico City Case.

B. Ford Heritage Sustainable Manufacturing Model

C. Hierarchy of Levels of Analysis in Automotive Aluminum.

D. Lean Sustainment Initiative (LSI) for the US Air Force.

IVA. SUSTAINABILITY IN A DEVELOPING WORLD MEGACITY: THE MEXICO CITY CASE[7]

A striking and perhaps definitive case demonstrating the multidimensional aspects of sustainability is the Mexico City metropolitan area (MCMA) megacity.

Among the largest urban agglomerations in the world, the MCMA has a population approaching 20 million people, with a substantial long-term growth rate; fifty years ago the city had a population of about 2 million. This population growth is continually fueled by the attractiveness of the MCMA to people around Mexico moving from rural areas and smaller cities for the economic opportunities they see in the capital and economic engine of Mexico. Land-use controls are weak, so poor people from the agricultural areas settle in “illegal” settlements on the fringes of the city. With this and an increasing trend among the more wealthy residents to suburbanize, the MCMA has sprawled over a large geographic area. So the MCMA, while huge in population, is interestingly not densely settled, with a uniformity of population and commercial densities across a large geographic area.

This has important implications for transportation and, more generally, sustainability. The land-use patterns that have developed make efficient high-capacity public transportation problematic. While Mexico City has the largest metro in the world (from a passenger-kilometer point of view), there are many areas of the MCMA that are not served by the metro, or even by bus service. So for poor, carless citizens on the fringes, the only real transportation option is the informal mode called *colectivos*, which simply spring up as new areas of the MCMA are settled. These *colectivos* are loosely regulated (if at all). Entry to the marketplace is not well-controlled and the services provided are flexible as to route and schedule. *Colectivos* provide a good level of service in terms of frequency, although they charge a premium fare to citizens who are often close to the poverty line. Further, the low-capacity *colectivos* add to congestion, since they operate in the core city as well, and to transportation-related emissions. Taken together with sharp increases in the ownership of private automobiles in the MCMA and traditional highway infrastructure that was not built to accommodate large traffic volumes, Mexico City has become one of the world’s most congested and most polluted cities, as auto emissions create serious problems in CO, NO_x, and particulate matter.

The topographic conditions of the MCMA exacerbate the environmental impact of transportation-based (and other) emissions. The MCMA is situated at one mile of altitude, which can cause incomplete combustion for internal combustion engines; further, Mexico City is surrounded on three sides by mountains with altitudes up to 10,000 feet, creating a basin in which polluted air tends to remain for long periods of time. “Bad air days” are a common occurrence, with the attendant morbidity and even mortality.

While the environmental problems of Mexico City are critical, it is important to bear in mind that Mexico as a nation has a strong economic growth policy, as Mexico works to raise per capita GDP, with a larger middle class and a smaller fraction of poverty-stricken people. And the MCMA is viewed as the economic engine of Mexico. So draconian attempts to limit mobility, either for people or freight, to effect environmental improvements will likely have a negative impact on economic growth in the MCMA and the nation at large. Of course, the air-quality problems of Mexico City can be an economic drag in and of themselves, since work days lost to sickness and public health problems among newborns and the elderly are an economic encumbrance as well as a societal disaster.

[7] Joseph Sussman is the lead author for this case vignette.

We have touched so far on two of the Three E's that define classic sustainability: *economics* and *environment*. The third E in the construct is *equity*. Certainly, in the MCMA in a developing nation, with the enormous range of personal incomes, decisions that we make to enhance the environment as well as to improve mobility (and hence the economy) should take distributional aspects into account. Economic gains need to be equitably shared across the population for a sustainable Mexico City to result. And environmental justice dictates that environmental stress should not unduly be placed on the poorer members of society.

Complexity clearly characterizes the MCMA. While there is a long and growing list of the different types of complexity that characterize systems (Sussman 2002; Lloyd 2002), here we find it useful to think of complexity along three dimensions (Sussman 2000):

> *Internal complexity*, defined by the number of components in the system and the network of interconnections between them

> *Behavioral complexity*, where system emergent behavior results from the manner in which sets of components interact, and

> *Evaluative complexity*, stemming from the competing perspectives of decision-makers and stakeholders in the system, who have alternate views of "good" system performance; this suggests that the performance measures for CLIOS are difficult to define and agree upon, depending on your viewpoint (for example, adding a runway to Boston's Logan Airport is usually viewed favorably by air travelers in the suburbs, who foresee better levels of service stemming from more capacity; however, residents proximate to the airport see only more noise and traffic)

In Section II, we introduced the idea of the CLIOS process as a means for understanding complexity This is important because we envision the CLIOS process as a way of identifying policy or management interventions to improve the system; understanding the source of the complexity of the system becomes crucial. Understanding the internal and behavioral complexity—basically, how the CLIOS works—enables the analyst to identify changes to the system to achieve more desirable outcomes. Once those changes are identified, however, the evaluative complexity will determine the feasibility of actually implementing those options by highlighting areas where barriers to implementation, resulting from different stakeholder views, might exist.

Mexico City is clearly a CLIOS (Dodder et al. 2004). It is a highly complex physical system embedded in a complex institutional environment.. As an illustration, Figure 1 shows a CLIOS *representation* of the passenger transportation system of the MCMA.

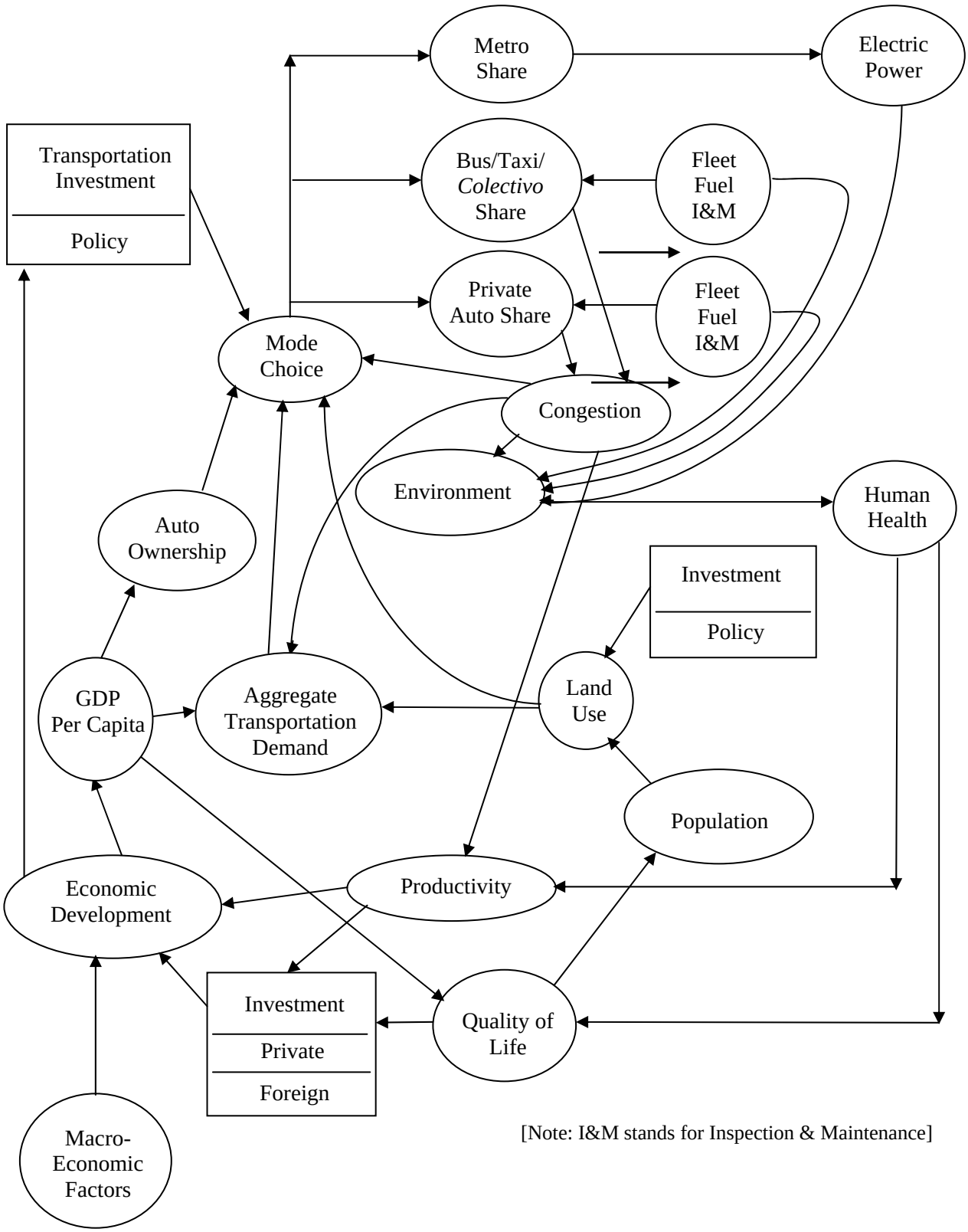

Figure 1: Passenger Transportation Subsystem for Mexico City Metropolitan Area

This *representation* is the first of three stages in the CLIOS process. The process goes on to *evaluate* strategic options and finally to *implement* them, as shown in Figure 2. We characterize the CLIOS process itself as a Christmas tree on which one hangs ornaments that represent the tools for specific applications (e.g., benefit-cost analysis, scenario planning, probabilistic risk assessment, cost analysis, and so forth). The detailed CLIOS process emphasizes identifying major sources of uncertainty and developing strategic options that are robust in the face of those uncertainties.

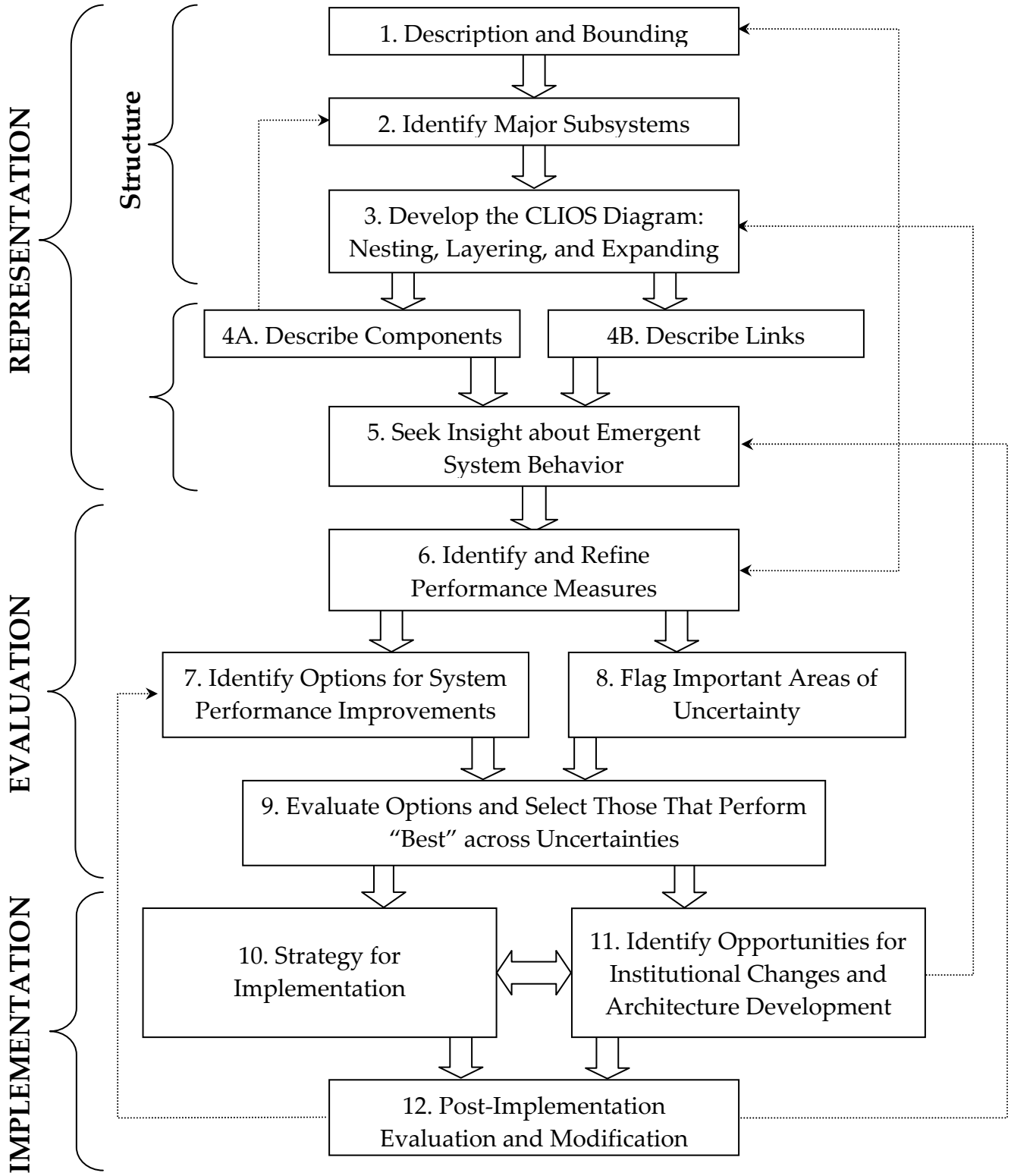

Figure 2: The CLIOS Process: Detailed View

The MCMA CLIOS is characterized by an institutional situation probably as complex as the physical system, as organizations try to manage transportation services consistent with environmental preservation, with an institutional structure that often seems far from appropriate for that purpose. But, whether appropriate or not, it is surely complex, and hence the MCMA is characterized by nested complexity, in which a physical system (depicted in parallel planes or layers), complex in and of itself, is "surrounded" by a complex institutional system (depicted as a sphere).

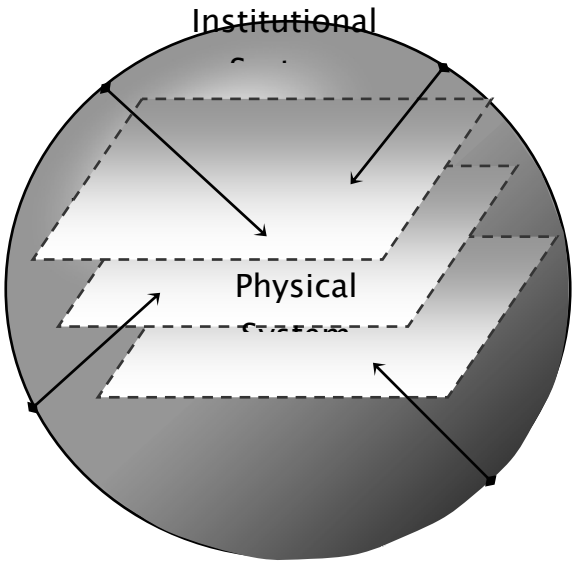

Figure 3: Nested Complexity

Figure 1 represents a single plane in the nested complexity figure (above).

In studying systems of this sort and in attempting to achieve multidimensional sustainability on the dimensions of environment, equity, and economics, one must recognize the interaction between the physical planes and the institutional sphere as one develops strategic options for the future. For example, referring to Figure 1, a policy variable, such as transportation investment in highway infrastructure or the Metro, clearly affects travelers' choice of transportation mode, the operation of the systems, and emissions on the physical system. The CLIOS process in Figure 2 is a way of studying systems (like the MCMA) that exhibit nested complexity. The strategic options we develop will involve technology and improved operating practices as we attempt to make the physical systems operate more effectively, providing more mobility at a smaller environmental cost. But our strategic options must also consider institutional strategies designed to enable us to seek better solutions; the policy options on the physical planes may be substantially constrained by inefficiencies in the complex institutional sphere.

For example, decision-making in the MCMA is plagued by its political structure. Three Mexican states—the Federal District (Distrito Federal, or DF), parts of the State of Mexico (Estado de Mexico, or EM), and a small part of Hidalgo—are all part of the MCMA; yet cooperation among them is often limited. For example, the Metro system has the lion's share of its mileage in the DF, stopping at the border of the EM and the DF, requiring inefficient intermodal trips for people living in the rapidly-growing EM. So regionally-scaled decisions about transportation infrastructure and operations are often limited by the contentiousness among the states in the MCMA.

Further, the institutional structure—we often call this the “regional architecture” when studying regional issues—is not well suited to multidimensional approaches to enhance sustainability. The connections among transportation planning, environmental planning, and land-use planning are modestly developed, or even non-existent in some cases. Therefore, the machinery to allow public institutions to make headway in enhancing mobility and air quality is flawed. Clearly, one of the policy options that must be considered in achieving sustainability for the MCMA is institutional change. The difficulties in achieving this are well known, but, nonetheless, policy options focusing on the physical systems and new technologies (intelligent transportation systems, improved fleet management, improved inspection policies, etc.) are unlikely to have their full impact, or perhaps even be implementable, without changes to the institutional structure (the regional architecture) in the MCMA.

To illustrate the range of approaches to achieving multidimensional sustainability in the MCMA, and our underlying philosophy, Table 3 contains excerpts from a summary presentation for the January 2004 Mexico City Air Quality Workshop.

These “meta-recommendations” highlight the need to understand sustainability in a multidimensional sense, the idea that no one strategy for achieving sustainability prevails but rather we must consider bundles of strategic options, the need for changing institutional roles, and the need for a broad geographic scale as the unit of analysis.

DISCUSSION

This first vignette makes the case that sustainability in the MCMA must be considered multidimensionally. Environmental considerations are critical and, in fact, were the genesis of sustainability in the first place. But at the same time, we need to recognize that economic growth and social equity must be part of the equation. Mexico City is a prime example of this tripartite sustainability construct.

Just as sustainability is itself multidimensional, we require in Mexico City, and likely other CLIOS as well, a multidimensional approach to achieving sustainability. On the one hand, our strategic options must include ways of modifying the structure and use of the physical systems through new technologies, better operating practices, and integrated design concepts for intermodal transportation systems. However, to make the sustainability of the physical systems viable, we need to also consider changes to the institutional structures that manage and purport to control those physical systems. Again, Mexico City is a prime example of a situation in which the physical options intended to enhance sustainability are unlikely to be effectively deployed or even be implementable without institutional change.

We now proceed to our second vignette, the Ford Heritage Sustainable Manufacturing Model, which describes a private-sector approach to achieving sustainability.

Breakout Report: TRANSPORTATION AND URBAN PLANNING (excerpts)

Seventh Annual Workshop on Mexico City Air Quality

January 2004

Recommendations:

- Approaches to improving air quality and mobility should be undertaken in context of full meaning of "sustainability"—environmental, economic and social equity and fairness
- To achieve improvement of air quality and mobility there is no single answer; improvement requires many coordinated policies and actions
- Recognize the interaction of transportation, environment, land-use and human health (personal exposure) in formulating policy options
- Undertake consensus-building to deal with governmental and stakeholder conflict
- Think of transportation as an integrated multimodal network
- Institutional restructuring needs to be designed, anticipating the difficult job of enacting change
- Rethink the federal role in transportation and air quality issues
- The span of policy should be the full region surrounding the Mexico City metropolitan area
- Emphasize human resource development, and the need for capability for handling contemporary complex transport planning and management issues
- Scan new technologies to select innovation consistent with societal goals
- Examine possibilities for congestion pricing as a potential instrument to improve mobility and air quality within the overall package of strategic options
- Consider metro expansion, but only in the context of a broader package of options to enhance accessibility
- Undertake bus rapid transit in a manner integrated with other transportation modes as an accessibility strategy
- Emphasize freight management improvement because of its importance to the economy

Table 3: Excerpts from 2004 Mexico City Air Quality Workshop

IVB. FORD HERITAGE SUSTAINABLE MANUFACTURING MODEL[8]

Established in 1917, Ford Motor Company's River Rouge operations have long been celebrated as the birthplace of vertically integrated, mass production operations. At its peak, the complex employed over one hundred thousand people and transformed raw iron ore, sand, and other materials into steel, glass, and, ultimately, fully assembled automobiles in seventy-two hours. By the end of the century, however, the company faced a hard choice: would this now aged industrial site be revitalized or phased out? In 1999, the company decided to invest $2 billion in order not just to revitalize the site, but to make it a leading example of the company's commitment to sustainability. The Rouge revitalization was designed to be a "legacy for the future, built on the past."

The Ford Heritage case is illustrative of a private corporation voluntarily elevating sustainability into a central design principle. In the first part of this case, we will examine the competitive and leadership context for this move and the underlying principles. Then we will identify four different aspects of sustainability and highlight themes that are evident in each aspect of this story, which is still unfolding.

FORCES DRIVING SUSTAINABILITY AT THE FORD MOTOR COMPANY

Auto companies have not historically been seen as leaders with respect to sustainability. Yet leadership around sustainability is emerging as a key part of the competitive landscape in this industry. Most of the visible competition centers on products. In this competition, we see three very different strategies at play.

In Europe, the focus is on a new breed of diesel fuel engines, which have some environmental advantages with respect to traditional gasoline engines. However, European government support for the diesel engines has also been criticized as a potential barrier to trade, linking competitive and regulatory aspects of sustainability. In North America, Ford, General Motors, and what is now DaimlerChrysler all took their lead from California's mandate for zero emissions, focusing on electric or other alternative fuels—another regulatory piece in this puzzle. There is some evidence that US design engineers knew in advance that some of the design and infrastructure barriers associated with zero emissions were insurmountable, but they did not feel that they could ignore the regulatory mandate. By contrast, Toyota and some other Japanese manufacturers did not invest nearly as much in compliance with the California mandate and instead focused on hybrid gas and electric engines. While these hybrid vehicles are now being brought to market by a number of manufacturers, it remains to be seen if this approach will be sustained by sales. Additionally, many major auto companies are investing in the development and use of what are sometimes termed "green materials" that facilitate recycling—an issue particularly highlighted in European legislation on this matter and discussed in the case study on aluminum recycling that follows in this chapter.

The long-term sustainability story is still unfolding with respect to the cars and trucks produced in this industry, but there is more to the concept of sustainability than the environmental impact of the vehicles and the associated mix of regulatory and market forces. In particular, the Ford Heritage initiative features voluntary support for four additional aspects of sustainability that are, at present, less visible, but no less important in broadening our understanding of the concept and that could diffuse to have a substantial impact. First, this initiative features a new manufacturing facility in which sustainability is built into the physical design, including a building with a living roof, natural stormwater management systems, paint plant emissions innovations, integration of health and safety into the construction and design of the facility, and a surrounding 1.5-mile green belt. Second, sustainability is built into the social and business systems through a lean production model that is designed to be sustainable as leaders change, that features the integration of

[8] Joel Cutcher-Gershenfeld is the lead author for this case vignette.

environmental metrics at the front-line work group level, and through knowledge-driven work systems that represent a sustainable model for the union and workforce as stakeholders. Third, sustainability is the governing principle guiding relations with the community and other stakeholders, as reflected in ongoing forums for dialogue and attention to issues of congestion, noise, jobs, transportation systems, and area environmental concerns. Finally, sustainability is a mindset being fostered throughout the operations, ultimately driving deeper questions and more creative solutions to address the environmental impact of the product itself.

Key leadership for this initiative has come from Ford Chairman and Chief Executive Officer William Clay Ford, Jr., who has had to justify the revitalization of Rouge in the context of a highly competitive industry that is unrelenting in its pressure on cost and financial performance. CEO Ford signaled this balance in the company's 2002 Corporate Citizenship Report when he commented: "There are no shortcuts to sustaining our success for another century. To maintain the financial health that is essential for our survival, we are revitalizing our values as well as our business plans. That's what it will take for us to create greater value for all of our stakeholders and have an even more positive impact on the lives of people around the world in our next one hundred years." This approach is reflected in the way the company defines sustainability, which is: "meeting the needs of the present without compromising future generations" and "balancing the short- and long-term effects of design on social responsibility, environmental performance, and business results."[9] Although the revitalized Rouge operations are still in a launch phase, we will examine the four additional aspects of sustainability highlighted by this case as part of the larger theme of this chapter, which is a broadened perspective on sustainability.

CORE PRINCIPLES

Guiding the Heritage initiative are a set of principles articulated by Bill Braungart in 1993, codified by architect William McDonough and adopted as the central theme for the 2000 Hannover, Germany, World's Fair, which was centered on the concept of sustainability. These principles, which are referred to as the Hannover Principles, are centered on the core sustainability concept of a balance across ecology, economy, and equity.[10] This is a parallel formulation to Bill Ford's vision, which is centered on "people, process, and product." The planners from Ford met with Michael Braungart, architect William McDonough, and many other experts. They learned that it was not enough to just announce what is sometimes referred to as a "triple bottom line." This may be the desired outcome, but achieving it requires incorporating the principles into project decision-making and daily operations. As Jay Richardson, Heritage Project manager, commented, "We learned that balancing these principles required us to look at them as a 'fractal' model—you could see them as the overall principles, but each aspect was also found in each decision. You might be making a decision that emphasized ecology, but you also had to be mindful of economy and equity. If the focus was on economy, you still had to be mindful of ecology and equity. In each stage of the design process, you had to think about all three impacts."[11]

---

[9] Quotes in this paragraph are from standard presentation materials used by Dennis Profitt, Rouge Center site manager, 2003.

[10] As host of the world exposition in the year 2000, the city of Hannover, Germany, commissioned the design principles to insure that the design and construction related to the fair would represent a sustainable development for the city, region, and world. It was hoped that the Hannover Principles would inspire an approach to design which might meet the needs and aspirations of the present without compromising the ability of the planet to sustain an equally supportive future. The principles emphasize the coexistence of humanity and nature, the concept of interdependence, respect for spiritual and material consciousness, responsibility for the consequences of design, a focus on safe objects of long-term value, eliminating waste over the full life cycle of products and processes, relying on natural energy flows, understanding the limitations of design, and seeking constant improvement through the flow of knowledge.

[11] Personal interview, February 6, 2004

The design team for Heritage spent a year with Braungart and McDonough at the Battelle Labs Consulting, one of the US national labs that has a consulting group on sustainability. They followed a highly structured process (Systems Effects Mapping) identifying opportunities associated with the revitalization of the facility and assessing implications on all three dimensions. Over three hundred ideas were generated and taken through this process. In each case all three lenses were used. For example, just viewing storm water run-off through an economy lens typically leads to a system that takes the run-off underground as quickly as possible. Adding the ecology lens invited questions about ways to use the water as irrigation for plants and ways to filter the water prior to sending it underground. Similarly, the administrative offices have been located in the center of the plant. This is the most “expensive” real estate in a factory. It is more economical to locate the administrative offices in a separate building next to the plant, which is what is typically done. However, the economic savings were balanced in this case by the focus on equity or collaboration of people. By having the senior leaders in the center of the operations, the social system was more likely to be sustainable.

Not all ideas survived all three filters. Richardson notes that approximately one hundred of the initial three hundred ideas were implemented. For example, there was a proposal to use geothermal energy for heating and cooling. An initial estimate of fifty wells, each fifty feet deep, showed promise with respect to both the ecological and economic lenses. Each well would bring up underground water and generate energy from the temperature differential above ground. A subsequent study revised this estimate to four hundred wells, each five hundred feet deep, and then even this was increased to one thousand wells, each five hundred feet deep. At that point, the idea couldn’t be justified relative to the existing co-generation facility. Yet, this focus on the heating and cooling of the plant did trigger the idea of having the roof be forty-three feet high, instead of the planned twenty-four feet. Replacement of forty small units with the installation of five large heating and ventilation units allowed the designers to eliminate the vast network of ducts that would inefficiently transport hot and cold air,. Instead, the entire building was designed to serve as a ductless space with natural convection air flow.

A SUSTAINABLE PHYSICAL FACILITY

The facility, which was designed by the architect William McDonough, is a showcase for environmentally aware design of manufacturing operations. With sixty skylights and ten giant rooftop monitors, natural sunlight reduces the need for artificial light inside the building by half on sunny days. The assembly plant roof is covered by ten acres of sedum plants that absorb rainwater and carbon dioxide, while producing oxygen. This “living roof” also provides insulation that is expected to cut heating and cooling costs by 5 percent, as well as double the useful life of the roof. In order to constructively channel the 350 million gallons of annual storm water runoff, the plant and its living roof are incorporated into by a twenty-two-acre natural culvert and wetland system featuring twenty thousand shrubs and eighty-five thousand flowering perennials. This is integrated with storm water that flows through a special porous pavement into this wetland system. There is also an experimental project being conducted with Michigan State University to explore what is termed “phytoremediation,” in which plants help to break down contaminants in the soil into harmless organic compounds—highly significant in a site that has seen a century of industrial operations. Finally, the facility features a new paint shop, which is already in use and which minimizes volatile organic emissions and provides a superior quality paint job.

In considering the way this design is more sustainable, two themes are evident, which are the concepts of simplicity and transformation. The physical design emphasizes simpler approaches to natural light, soil remediation, roofing, and water run-off that are both more effective and more sustainable. Moreover, these approaches are transformational in at least two ways. First, they manage storm water and natural light in ways that are environmentally helpful, and, second, they transform separate aspects of a building, such as a roof or lighting, into an integrated ecosystems for sustainability. The ultimate impact of these designs has the potential to be felt not just in the River Rouge area, but on a global basis if these innovations diffuse on a broad basis.

A SUSTAINABLE MANUFACTURING MODEL

A sustainable approach to manufacturing is reflected in the design of the Dearborn Truck Plant (DTP), which is at the heart of the Rouge complex and is capable of simultaneously producing nine different vehicle models based on three different platforms. The facility fully utilizes Ford Production System (FPS) principles, which is Ford's codification of what is known as a lean approach to operations (Womack et al. 1990; Womack and Jones 1996; Murman et al. 2002). In this facility, what Ford terms synchronous material flow (SMF) is linked to in-line-vehicle sequencing (ILVS), so that even remote suppliers can get the right parts get to the right car at the right time with minimal in-process inventory. In-station process control (ISPC) and quality operating system (QOS) principles ensure that quality is built in at the point of assembly, rather than inspected after the fact. The principles from Ford's total productive maintenance (FTPM) approach emphasize preventive machine maintenance.

Sustainability is manifest in countless operating decisions. For example, exclusive use of direct-current power tools are being implemented for this facility. These tools are more energy-efficient, and they are superior ergonomically and in product quality compared to the compressed air tools they replaced. The tools also provide automated feedback to the operator to ensure that nut tightening and other tasks meet production specifications, with long-term benefits for the product itself. Safety principles have been integrated into all aspects of the operations, with accident prevention principles built into the construction operations and a plant design that features elevated walkways, meeting rooms, and eating areas, as well as extra-wide aisles to protect pedestrian traffic from the assembly and material-handling operations. Administrative offices are in the middle of the plant, facilitating collaboration among hourly team leaders, engineering support staff, management leaders, and others. Production conveyance in the final assembly area is designed around separate "skillets" for each car, so that the vehicle can be raised or lowered to optimum levels for operator ergonomics. Noise levels have been reduced to the point that hearing protection is not required for assembly line operations.

At the heart of these operations is a team-based, knowledge-driven work system. As Dennis Profitt, Ford Rouge Center site manager, commented, "We have always used people's hands and their bodies. Now we are trying to develop together a relationship that's knowledge driven. We're entering a point in time as a society—not just at Ford—where knowledge is recognized as the key ingredient to go forward in the future" (Ford 2002). Skills, capability, and leadership are broadly distributed throughout the operation. There is a training "plan for every person" in the facility, as well as a "plan for every machine" and a "plan for every process". This approach reflects a common experience among a number of the senior managers in the facility. In past assignments in various parts of the world, there has been success introducing lean principles, but the efforts proved vulnerable when the leaders were transferred to new assignments. By contrast, this implementation effort has been designed from the outset to be sustainable even in the face of leadership turnover.

In this manufacturing model, we find an emphasis on the themes of stability and continuity as central to sustainability. The manufacturing model first depends on stable social and technical systems as a foundation for lean production principles. Further, the model is only sustainable if there is continuity of leadership over time.

SUSTAINABLE COMMUNITY AND STAKEHOLDER RELATIONS

Principles of openness and accountability play an important role in establishing sustainable community relations. During the planning of the Ford Rouge Center, company officials met regularly with the Rouge Area Environmental Coalition, which includes the Southwest Detroit Environmental Vision, the Southwest Detroit Business Association, Detroiters Working for Environmental Justice, the Ecology Center, and other independent local organizations. Initially, the group clashed with Ford on issues relating to paint emissions (which continue to be an

important topic of discussion), but congestion, noise, jobs, and area environmental concerns also entered the agenda. There are now regular quarterly meetings of what has emerged to be a constructive, problem-solving forum. In a recent issue of the newsletter published by the Ecology Center, which has been critical of Ford in the past, editor Ted Sylvester described the full range of environmental aspects of the Heritage initiative and praised the approach and time commitment to these community meetings demonstrated by senior leaders from Ford. This apparently included honesty about first resisting the direction from Bill Ford, Jr., but now embracing the vision (Sylvester 2003).

In 2003, Ford issued the site's first public environmental report with detailed data that serves as a baseline for environmental improvement efforts. The site also features a public visitor's center, resuming auto plant tours that have not been conducted since 1980. Interestingly, the project included the reconstruction of the pedestrian overpass that was the site of a 1937 fight between union organizers and Ford security officials, that was captured in the pages of *Life Magazine* and that helped shift public sentiment in favor of the union effort. This move sends an important signal to the community and to the community-based union. Jerry Sullivan, president of UAW Local 600, which represents most of the production and maintenance workforce at the Rouge, commented, "People are very passionate about the history of this place and also what is accomplished for the workers. They feel very comfortable with the Rouge as their second home." [12]This stands in contrast to the early adversarial relationship between Ford and the UAW, as well as the long period of arm's-length relations between the two organizations. It emphasizes a partnership approach that has been fostered since the early 1980s and that is now seen in the context of a commitment to sustainable relationships with key stakeholders.

Today the company and the union have invested considerable time and effort to ensure that over thirty different daily, weekly, or monthly union-management forums or committees have a clear charter and are operating in a stable and effective way. This includes the overall joint labor-management committee, as well as joint committees addressing issues such as quality, safety, training, and job security.

Similarly, the company has emphasized longer-term relationships with its suppliers—a necessary element of the lean production model. Suppliers have increased involvement in product design and a more integrated role to ensure the delivery of components in ways that will support Synchronous Material Flow using a predictive scheduling system Work teams from the supplier operations can link directly to front-line production teams in the Ford operations, ensuring the effective relations necessary to such an operation. Also, the revitalization of the facility and surrounding area has involved forging partnership relations with state, regional, and local government officials.

In this aspect of the case, we see the themes of transparency and partnership illustrated by the approaches to the community and other key stakeholders. To be sure, all of these relationships—community, union and suppliers—are what we term mixed-motive relationships. They feature a mixture of common and competing interests that will lead to a mix of forcing and fostering dynamics over time.[13] A sustainable approach to these relationships does not mean that the parties will not have their differences over time. Rather, it means that the forums and relationships have been established to ensure constructive resolution of these conflicts as they emerge.

A SUSTAINABILITY MINDSET

Despite the many important ways that sustainability has been advanced through the revitalization efforts at the Rouge site, there are still critics who argue that the company and others in the

[12] Ford 2002 Corporate Citizenship Report.
[13] For a full theoretical treatment of forcing and fostering dynamics, see Walton et al. 1994.

industry continue to build large, gas-guzzling vehicles. For example, a member of Southwest Detroit Environmental Vision, Martha Gruelle, was quoted as stating: “All of this is welcome and commendable. Still, one should remember that Ford Motor Company’s biggest environmental impact is through promotion of their highly profitable SUVs and pickup trucks, and resistance, along with other automakers, to stricter standards on fuel efficiency” (Sylvester 2003). As already noted, Ford and others have committed substantial resources to the development of alternative fuel vehicles, but there is no getting around the fact that the company produces a full line of cars and trucks for sale in a domestic market (based on customer demand and preference) that do not necessarily address the issues of fuel efficiency. Here we see clearly the difficult task of balancing immediate customer and business results with the longer-term commitments to sustainability.

At the time of this writing, the Dearborn Truck Plant is building Ford’s new F150 pick-up truck and other models based on that platform. Although much of the design of this product took place in advance of the launch of the Rouge revitalization effort, there were already instances where representatives from the manufacturing operations were raising sustainability questions that might not have been raised in the absence of these efforts. For example, this mindset prompted a development project with the regional gas and electric company, DTE Energy. This project involves the application of fuel cells to eliminate an incineration process of paint organic emissions by using this energy source to create electricity and to reduce CO_2 emissions and organic emissions. Moreover, the production system emphasizes product flexibility, which allows quick response to changes in consumer demand and product demographics, as well as new developments in technology and materials that are consistent with sustainability principles. Over time, it is anticipated that the sustainability mindset will increasingly permeate interactions and relations. This reflects the themes of balance and evolution that are also central to Ford’s approach to sustainability. Simply put, the company does not see itself as able to change all aspects of its operations or business model in service of sustainability immediately, but it is committed to a long-term change process based on a business imperative to guide broad-based and growing support for a mindset centered on sustainability and innovation.

Evidence for a balanced and evolutionary approach was signaled throughout North American operations when the standard metrics were expanded. In addition to tracking safety, quality, delivery, cost, and morale (SQDCM), the company added environment to that list. Now every work area has a standardized metrics board where the SQDCME metrics are visible and regularly updated with data that is then used for continuous improvement efforts. These same metrics—including the “E” for environmental metrics—are then aggregated at the department, plant, and divisional levels. Revitalizing the Rouge site has sent an important signal to the community, the workforce, suppliers, and the public at large about an overall sustainability mindset, which is concurrently permeating other aspects of corporate operations.

EMERGENT THEMES AS ASPECTS OF SUSTAINABILITY

The Ford Heritage story illustrates how sustainability, once adopted as a core design principle, permeates so many aspects of the physical, social, and technical systems associated with a modern production operation. The overall approach is centered on a three-way lens in which ecology, economics, and equity increasingly inform how decisions are made. In this particular case, we have highlighted four sets of related themes, which are:

> Simplicity and Transformation

> Stability and Continuity

> Transparency and Partnership

> Balance and Evolution

These themes may help to summarize the ways sustainability has been operationalized in the context of facility design, manufacturing operations, community and stakeholder relations, and an ongoing sustainability mindset. Although there is much to be done and even more to be learned about all of these themes, the Rouge revitalization vision is already being realized in making these concepts visible and in encouraging analysis and dialogue about them. Ultimately, it is the ideas themselves that may represent the most important, sustainable legacy of the revitalization initiative

IVC. HIERARCHY OF LEVELS OF ANALYSIS IN AUTOMOTIVE ALUMINUM[14]

INTRODUCTION

Engineering materials or the physical resources from which they are won have long played a role in discussions of sustainability. Arguably access to specific resources has been the driver of much conflict throughout history. Among formal discussions of sustainability, even Malthusian era concerns can be posed in terms of long-term access to material resources—in this case access to fertile land sufficient to feed a growing population. Although basic sustenance is less of an issue today, there is a broadly held concern that we may be approaching the carrying capacity of the planet for present-day standards of living. Those concerned point out that modernity's remarkable gains in prosperity have come about largely by exploiting ever greater quantities of metal, mineral, and energy resources. Confronted with a history of escalating resource consumption, the question that then arises is: Can the Earth sustain the spread of western standards of living across a growing world population?

These issues have received notable scrutiny, with many investigators concluding that today's rates of consumption are not sustainable (Meadows et al. 1972, Frosch 1989). However, resource economists have carefully shown that a pure trendline treatment is too simple. For example, catalogued reserves only include resources meeting a specific fiscal definition of availability. More importantly, the effects of economic forces and technological innovation will ration scarce mineral resources and substitute more appropriate ones (Hotelling 1931, Solow 1974, Meadows et al. 1992, Turner et al. 1993). This type of behavior can be seen in Figure 4, which shows how increasing technological efficiency—in the form of better design and material substitution—has prevented steel use from keeping pace with population growth.

However, resource depletion may not be the only, or even the critical, characteristic defining global sustainability. Instead, it may be that the derivative effects of our increasing industrial and

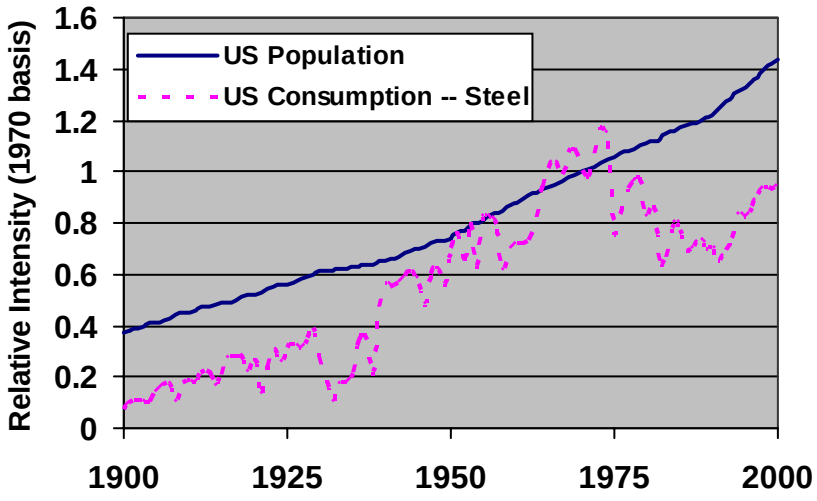

Figure 4: Comparing Population Growth with Steel Consumption
Both Normalized to 1 at 1970

[14] Frank Field and Randy Kirchain are the lead authors for this case vignette

economic activity, like the production of environment altering effluents, will ultimately fix this limit.

Fortunately, these problems have not gone wholly unaddressed. Although engineers may not have framed the objective of their work within the context of sustainability, many engineering developments have contributed to improving the sustainability of the systems with which we interact. Many examples can be cited where products can now be made with less material, less energy, and with less environmentally deleterious side-effects. Nevertheless, many still believe that this progress is insufficient—that new strategies are needed to move towards sustainability. Although these strategies will include changes in behavior and policy, technological change will certainly play a critical role. How can these technological strategies be identified?

Traditional engineering analyses clearly will still play a vital role; detailed understanding of physical reality will continue to provide a basis for improvements. However, the focused reductionist approach that is the hallmark of such an approach will ultimately be insufficient. Instead, engineers and decision-makers will also need to broaden the scope of their inquiry.

The next sections explore how expanding the scope of analysis beyond traditional boundaries can reveal new strategies. Each scope of analysis contributes technological insights, but all will be required to move to a sustainable state. This exploration is carried out in the context of the sustainable use of materials within the automobile. In the end, there are many elements that determine the sustainability of materials use. For the purposes of this discussion, only one (energy consumption) will be explored. Even from this limited perspective some useful lessons arise.

FOCUSED ANALYTICAL INQUIRY: TRADITIONAL ENGINEERING SOLUTIONS

We will first focus on how a traditional approach to technological solutions has provided great improvements in energy based sustainability. When improving the sustainable use of materials within the automobile, the most natural place to start is with the predominant material in today's (and yesterday's) vehicles—steel. For vehicles of all types and sizes, steel comprises more than 65 percent of their mass. Worldwide this translates into a consumption of more than 40 million metric tons annually, a total expected to reach nearly 70 tons by 2050. The environmental profile of steel production is intimately tied to that of the automobile.

While concerns over sustainability may not have motivated them, countless innovations over the past century have significantly altered the environmental profile of steel. Anecdotally, lifelong residents of steel-producing towns can attest that technological changes have literally had a visible effect on air quality. Figure 5 shows the quantitative impact of these innovations. Specifically, over the past fifty years the energy consumption of the steel industry has dropped by nearly 60 percent. The key technological innovations which led to this decrease are (Stubbles 2000):

- The total replacement of the open hearth process by basic oxygen and electric furnaces.
- The use of pellets in the blast furnace
- Improving chemical efficiency, heat transfer, and requiring less burden and coke
- The almost total replacement of ingot casting by continuous casting
- Reducing waste heat and improving yield

In all of these cases, traditional engineering analyses—better understanding of thermodynamics, chemistry, and physics—provided technologies that reduced energy consumption and, therefore,

operating cost. These innovations drove down the unit energy intensity of steel production and correspondingly the energy intensity of the steel intensive vehicle. In fact, over the past fifty years, these developments have reduced energy requirements by more than 40 Mbtu per vehicle.

Ultimately, there is a limit as to how far this strategy can improve the energy intensity of steel and automobile production. Regardless of the technology, energy is required to initiate reactions, melt the metal, and dissolve the constituents. Calculations of theoretical minimum energy requirements suggest that there is only another 20-25 percent improvement that is possible (Fruehan et al. 2000). To provide more substantial improvement will require other strategies. The next section reveals how changing scope can reveal new strategies.

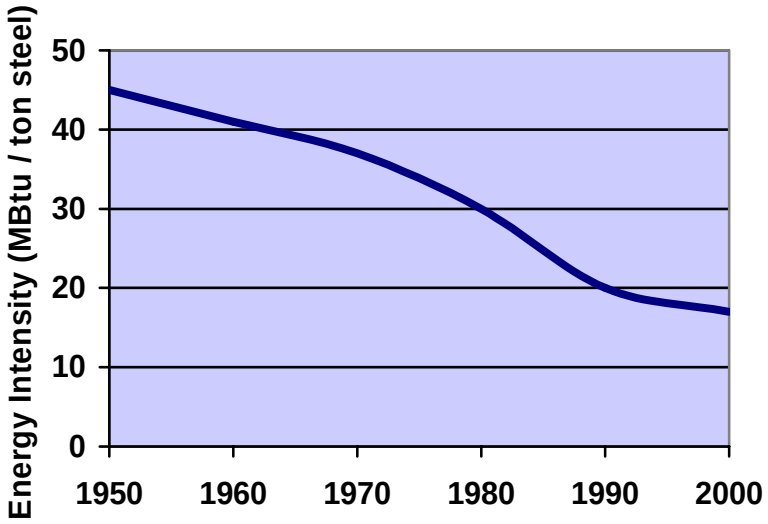

Figure 5: Historic Energy Intensity of Steel Production in the US
Includes all forms of production (Source: Stubbles 2000)

CONSIDERING THE MATERIAL/PRODUCT LIFE CYCLE

Improving the extraction efficiency of any material directly improves the sustainability profile of the products made from that material. However, to achieve truly sustainable material consumption, it is necessary to step back and realize that consumers rarely purchase materials for materials' sake. Generally, consumers purchase products based on their utility for that product's "performance" and cost. While materials underpin both of these characteristics, materials are valued only insofar as they realize customer-perceived features. For the purposes of sustainability, this presents a opportunity. The sustainability of products can be improved by substituting less problematic materials. Does such an opportunity exist for the automobile?

Table 4 shows both the unit energy required to produce a number of engineering materials from primary sources as well as the energy required to deliver an equivalent amount of stiffness in a finished part (assuming stiffness limited design and masses normalize to required steel mass). From this perspective, it is clear that no metal can rival the energy efficiency of steel components. In fact, only two nonmetals on the list are competitive: glass and sheet molding compound (SMC), a composite material that incorporates glass fibers. The former is excluded because of its brittleness, the latter does see wide application in closures and non-appearance parts, but is not viable for wholesale substitution of steel due to its cost at high-production volumes.

Material	Primary Energy	Modulus	Density	Mass of Equivalent Stiffness	Energy per Equivalent Stiffness
	MJ/kg	GPA	g/cm3		MJ
Metals					
Al	181.7	70	2.9	0.6	**119**
Cu	99.9	115	8.8	1.5	**149**
Mg	284.2	45	1.8	0.5	**138**
Pb	41.1	14	11.3	5.5	**225**
Steel	40.1	200	7.8	1.0	**40**
Zn	53.0	85	7	1.4	**73**
Nonmetals					
ABS	110.8	2	1.05	1.4	**149**
Polyester	95.8	5	1.5	1.2	**117**
PP	74.0	1.5	0.9	1.3	**99**
PU	72.1	1.8	1.1	1.5	**107**
SMC	54.0	15	1.8	0.8	**46**
Glass	30.0	80	2.55	0.5	**16**

Table 4: Comparing the Energy Intensity of Various Engineering Materials
All energy values assume production from primary sources. Secondary energy figures can be significantly different. Masses normalized to steel (Keolian, Kar, Manion, Bulkley, (1997).

Examining Table 4 alone would suggest that steel is the only sustainable option. However, this would not reveal the full story. The materials from which a product is made effect its energy profile both directly (through the energy embodied in their production) and indirectly (by effecting the performance of those products). In this case, the primary effect of alternative materials is to change the mass of the vehicle. If materials reduce vehicle mass, the vehicle will require less energy during the use. By extending the scope of analysis beyond just the material, including also the performance of the product, it is possible that additional improvement strategies will emerge.

This concept is captured in the notion of life-cycle assessment (LCA). This method strives to bring the effects of product and process choices into sharper focus by broadening the scope of the "control volume" within which the analysis of environmental effects are considered. In doing so, it is expected that design choices will be made that will consider the choices' net effects throughout the production, use, and disposal of a product.

The major problem that LCA faces is that, while the notions of LCA are relatively simple to articulate, their practice is monstrously difficult to implement. While every engineer can readily grasp the notion of extending the control volume of the problem, the realities of such extensions confront the practitioner with problems with complexities that build upon one another until it may appear that the benefits of LCA are far too paltry to offset the costs implicit in its undertaking.

Yet, comparable to the complexities of other large system problems, working to pursue the goals of the life-cycle method can, and do, yield insights into product and process development that would otherwise be inaccessible to an engineer focused on traditional engineering boundaries.

The two key material classes that are under consideration for vehicle lightweighting are structural plastics and light metals. Between the two, light metals, especially aluminum, have particular advantages. First, aluminum sheet-forming processes are largely compatible with current manufacturing practices and equipment, meaning that the capital requirements for making the conversion are not as great. Second, aluminum can be designed using the same class of

engineering tools as those employed in steel design, while reinforced plastics introduce novel design and qualification issues (c.f. anisotropy and complex failure modes). Finally, reinforced polymers are tainted by the perception that they are not as recyclable as metals, with the consequence that most recycling regulations discourage their use.

In the end, aluminum represents a conundrum. While an aluminum vehicle can weigh approximately 40 percent less than its steel counterpart, the energy required to produce a kilogram of aluminum is dramatically greater than that required to produce a kilogram of steel. Is the benefit of weight savings sufficient to outweigh the burden of production?

Figure 6 quantifies the case for aluminum in vehicles. Considering the replacement of a 275 kg steel body structure with a 165 kg aluminum one, initial metal production energy is nearly three times higher for aluminum at 31 vs. 11 GJ. However, assuming approximately eleven thousand miles driven per year, the lighter vehicle saves 2.8 GJ worth of gasoline annually. As such, the aluminum vehicle yields a net energy savings after approximately seven years of typical driving.

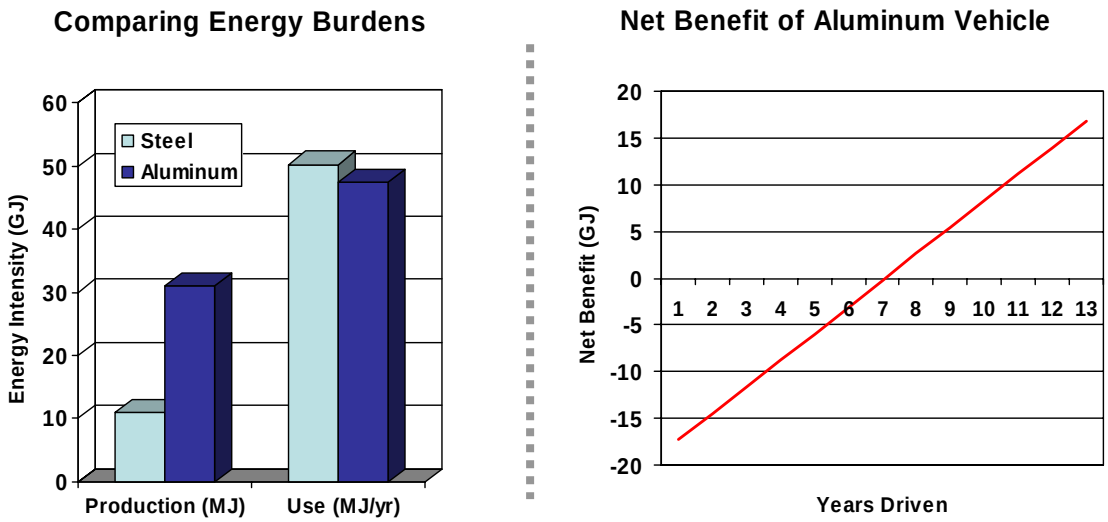

Figure 6: Comparing the Energy Burden of Steel- and Aluminum-intensive Vehicles—Point Estimates and over Time

Assumptions: 11,400 miles driven per year
steel vehicle: total = 1375 kg, body = 275 kg, fuel economy = 27.5 mpg
aluminum vehicle: total = 1210 kg, body = 165 kg, fuel economy = 29.15 mpg

In the end, strategies for improving materials sustainability can be found not just within the processes of extraction and conversion, but also through modifying the product. Uncovering those strategies required expanding the analysis beyond the traditional purview of the materials engineer—beyond processing into the characteristics of the use phase.

SYSTEMS METHODS FOR MATERIALS SUSTAINABILITY

Recent research shows that it is possible to gain additional insights by drawing analytical boundaries even larger than typical for life-cycle assessment—beyond the product. For illustrative purposes, we will turn our focus again to the upstream burden of material extraction/production. For most materials, upstream impacts can be mitigated if production relies upon secondary rather

than primary feedstocks. For aluminum, the difference between primary and secondary

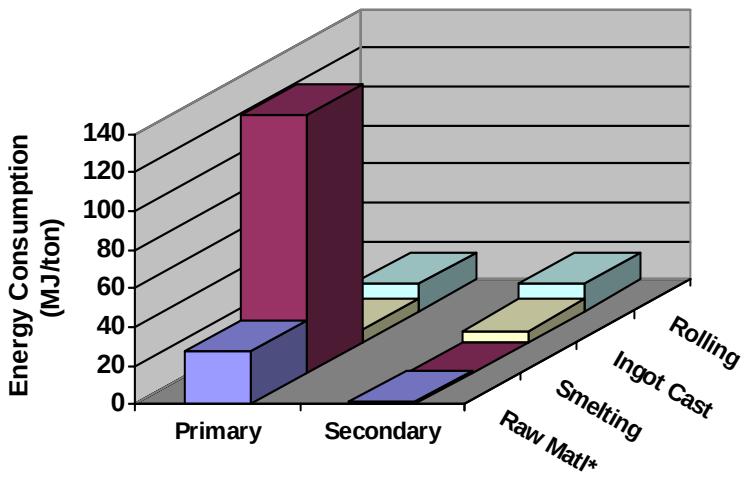

Figure 7: Comparing Aluminum Energy Consumption: Production from Primary Ore vs. Scrap (Secondary)

production is particularly striking because of the large energy requirements of ore reduction (i.e., smelting, cf. Figure 7). The obvious preferred strategy, therefore, would be to manufacture all products from secondary (i.e., scrap) aluminum. Such a simple strategy is not viable in general because there is not sufficient secondary availability, but even on the margins aluminum reuse is complicated by the fact that aluminum is rarely used homogenously. Instead, in engineering applications, aluminum is alloyed with combinations of more than a dozen other elements to achieve the desired physical properties. The stringency of these compositional specifications limits the free reuse of scrap in new production. For example, it is simply not possible to make Alloy A (5% Si, 0% Cu) from scrap of Alloy B (0% Si, 5% Cu).

Because of this complexity, analytical methods are needed to reveal strategies for sustainable production of aluminum. These methods must be able to account for both the characteristics of the available raw materials—primary and secondary—and the specifics of emerging production demands. By applying systems methods such as optimization and simulation, it is possible to gain insight into this problem. The following paragraphs describe a case in which these methods were applied to examine the sustainable use and reuse of aluminum in the automobile.

The specific case study that is described looks at the production of future vehicles (specifically projected year 2010 vehicles) from both primary materials and the scrap aluminum collected from past vehicles (specifically year 2000 end-of-life vehicles).[15] The analysis focuses on strategies to maintain or improve scrap reuse. These strategies include alloy selection patterns, production practices, or the manner in which secondary materials are reclaimed, segregated, and sorted. For this document, the case description will focus on alloy selection strategies.[16]

In this case, linear optimization (LO) was used to model the aluminum recovery system. Specifically, the LO model examines the problem of mixing arbitrary quantities of raw materials

[15] The data used in this case is based on that developed by Gorban et al. 1994.
[16] The case that is used looks at the management of closed-loop aluminum reuse. Although the aluminum recycling system is not closed loop, the methods described subsequently could be applied to the entire system with sufficient data.

(pure or scrap aluminum) to produce a certain set of new aluminum alloys under certain constraints (e.g., the mixing of raw materials must lead to the right compositions for final products) and to meet certain objectives. In this case, the objective will be to minimize production cost. Interestingly, because production cost is driven by raw material cost, the primary mechanism to achieve cost reduction is to increase scrap reuse. As such, in this case, economic and sustainability objectives are largely congruous.

The primary output of the optimization is the combination of raw materials that would afford the lowest production cost. If the scope of the inputs is adjusted to that of a specific facility, such a result is of great value for operational decisions. Extending the analysis to the boundaries of a particular firm would reveal tactically relevant information such as attractive sources of raw materials or profitable product lines. For the purposes of the following discussions, the focus will be upon a larger scope of analysis—the entire industry. At the industry level, the primary concern is what strategic opportunities exist to maintain or improve the resource performance of this system. In this context, the primary optimization result is of limited value.

Nevertheless, the optimization produces other outputs, collectively referred to as sensitivity analyses, that can provide such strategic insights. One such sensitivity analysis result, known as a shadow price (SP), is generated for each of the mathematical constraints in this problem. A shadow price quantifies the sensitivity of the result to changes in those constraints (Bertsimas and Tsitsiklis 1997). Mathematically, this is defined as:

$$\text{ShadowPrice}_{\text{constraint}} = \left.\frac{\partial(\text{Objective Function})}{\partial(\text{Constraint})}\right|_{\text{Optimum}} \tag{1}$$

In words, a shadow price represents the change of the objective function, which in this case is the production cost, at the optimum if a specific constraint is modified by one unit. This information can provide insight on specific questions relevant to maintaining or enhancing recycling system performance. This information can be used to direct the behavior of 1) vehicle manufacturers, through the alloys they select; 2) aluminum producers, through the specifications of the alloys they produce; and 3) the secondary market, through the magnitude and form of scrap that they make available.

CASE RESULTS AND DISCUSSION

PRIMARY OPTIMIZATION RESULT FOR BASE CASE

The primary output of the base case optimization is presented here for reference. In the base case, out of 4,390 Mlbs of scrap available from old vehicles 3,573 Mlbs, or 81 percent, could be consumed in producing future vehicles. Out of 1,281 Mlbs of prompt scrap 1,272 Mlbs, or 99 percent, could be consumed. These results are summarized by scrap category in Table 5 below. The total production cost was modeled to be $4,716 million.

Scrap Groups	Available (Mlbs)	Consumed (Mlbs)	%
Bumpers	77	77	100%
Body Sheet	346	346	100%
Wheels	438	438	100%
Brakes	271	271	100%
Heat Exchange	382	382	100%
All Al Engine & Transmission	1,118	972	87%
Transmission	472	472	100%
Engine (Non Al Block)	525	11	2%
Media scrap	761	603	79%
SUB TOTAL (without prompt scrap)	**4,390**	**3,573**	**81%**
Prompt Scrap	1,281	1,272	99%
TOTAL	**5,671**	**4,845**	**85%**

Table 5: Base Case Results: Scrap Consumed in Production of New Vehicles
Post-consumer and Prompt Scrap

IMPROVING SCRAP REUSE THROUGH STRATEGIC ALLOY CHOICE: EXAMINING SHADOW PRICES ON DEMAND

Shadow prices on the demand constraints represent the amount by which production cost would increase if the amount demanded (i.e., produced) for a particular alloy was increased (for details see Cosquer and Kirchain 2003 and Cosquer 2003). For the case, shadow prices on demand are presented in Table 6 (those alloys whose production exceeds 200 Mlbs are highlighted in the table).

These results reveal which alloys are less expensive to produce and, therefore, drive toward a more sustainable system by driving up scrap use. According to Table 6, producing one more pound of alloy 332 would increase the overall production cost by $0.465. As an example of how this information can be used, consider modifying the base case by replacing 100 Mlbs of alloy 356 with 100 Mlbs of alloy 319 (scenario A). This change would both drive down production cost and increase scrap use.

Alloy	I. ype	SP ($/lb)	Alloy	II. ype	SP ($/lb)	Alloy	III. ype	SP ($/lb)	Alloy	IV. ype	SP ($/lb)
332	C	$ 0.465	MD353	S	$ 0.537	7021	S	$ 0.581	4032	E	$ 0.579
380	**C**	**$ 0.521**	MD354	S	$ 0.537	5010	S	$ 0.582	6111	E	$ 0.586
319	**C**	**$ 0.524**	MD356	S	$ 0.537	7072	S	$ 0.582	6013	E	$ 0.590
360	C	$ 0.526	MD359	S	$ 0.537	7129	S	$ 0.585	**6061**	**E**	**$ 0.596**
413	C	$ 0.531	RA238	S	$ 0.537	2010	S	$ 0.587	1100	E	$ 0.599
356	**C**	**$ 0.576**	4104	S	$ 0.564	5454	S	$ 0.588	6063	E	$ 0.604
515	C	$ 0.589	**6111**	**S**	**$ 0.566**	1350	S	$ 0.589	3003	E	$ 0.605
390	**C**	**$ 0.597**	6061	S	$ 0.573	5182	S	$ 0.590	7005	E	$ 0.606
354	C	$ 0.607	4043	S	$ 0.576				7021	E	$ 0.608
A356	**C**	**$ 0.608**	4045	S	$ 0.576				3102	E	$ 0.609
LOFE356	**C**	**$ 0.630**	3003+ZN	S	$ 0.578				5010	E	$ 0.609
357	**C**	**$ 0.631**	6063	S	$ 0.578				7129	E	$ 0.613
A206	C	$ 0.679	3003	S	$ 0.579				5454	E	$ 0.618
									5182	E	$ 0.620

Table 6: Modified Shadow Prices on Demand by Category
(C=castings, S=sheets, E=extrusions, forgings)

APPLYING SHADOW PRICE RESULTS: DIRECTING ALLOY CHOICES

The usefulness of the shadow prices results was tested, by using demand SP's to guide alloy substitution. Using Table 6 in combination with information about the use of alloys in specific vehicle components, specific new alloys choices were tested. Even when these changes are limited only to the engine compartment it was possible to improve reuse potential up by 20 percent.

Ultimately, many technical issues may preclude specific alloy substitutions; however, the above analyses indicate that for cases where technical feasibility exists, use of optimization results can lead to significant improvements in scrap reuse capacity.

This example only touches on the insights possible from clever use of systems analytical methods to the problem of sustainability. In this case, linear optimization was used to reveal material selection strategies which can be used by product designers to increase scrap use. These same methods can be applied to identify strategies to improve recycler and remelter processes. In all, by applying available methods to the entire system, it is possible to evaluate the sustainability of technological alternatives and to uncover new strategies to move toward sustainability.

DISCUSSION

Realizing sustainable materials systems will ultimately require changes in behavior, policy, and technology. Within this problem there is critical need for methods that will identify appropriate technological solutions and strategies. Traditional engineering analysis will still play a central role in this search, but there are limits to the ability of focused inquiry. This section has explored the

role of several analytical perspectives in identifying technical options. Specifically, cases exist that make it clear that expanding the scope of analysis beyond a specific technology to include first the product life cycle and eventually the material-product system exposes new options for addressing the burdens of materials use. Such systems approaches will be required to move industrialized societies to sustainable patterns of production and consumption.

IVD. LEAN SUSTAINMENT INITIATIVE (LSI) FOR THE US AIR FORCE: TRACING THE REPAIR OF AN AIRCRAFT FUEL-PUMP[17]

The aerospace industry is faced with a simple fact: Products are exceeding their expected life-span for service at the same time that resources throughout aerospace systems are increasingly constrained. Moreover, issues of sustainability were not overarching organizing principles in the initial design and production process. In exploring how to best manage aging fleets—military and commercial—in which more is expected with fewer resources, the industry has turned to the same lean principles that have revitalized manufacturing and that are beginning to have a broader impact across entire enterprises. Lean sustainment adds the dimension of time, but focuses on minimizing waste and delivering value across the life cycle of a product.

Early government efforts to realign procurement around life-cycle cost have had mixed success. There has historically been almost a firewall between the acquisition and sustainment functions. A core aim of MIT's Lean Sustainment Initiative (LSI) has been to introduce tighter feedback loops from sustainment operations back to design and production.

REMANUFACTURING AND SUSTAINMENT

The process that we label "remanufacturing" has been a common practice for certain high investment capital products, such as aircraft, railway locomotives, and heavy construction equipment. Remanufacturing is a complex process, which involves repairing and refurbishing parts in the carcass of the product. The process also involves planning activities to supply these parts and products, and coordinating the necessary personnel involved in the process. Remanufacturing is also practiced in the automobile aftermarket, where reconditioned parts and re-machined engines are readily available. We will undoubtedly see remanufacturing extended to other products and industries as the availability of landfill space becomes scarcer.

This initial study attempts to understand the remanufacturing process with a special focus on the role and nature of the information involved. As a first step, we simultaneously trace a key physical aircraft component and the related information throughout the process of remanufacture. We chose to trace a fuel pump, an essential part of every modern aircraft. The aircraft is not viable unless it has the pump; the pump is not viable unless it has the stator installed. A stator is a system of stationary airfoils in the compressor of an aircraft fuel pump. We studied a particular type of pump that is installed on many military aircraft. We also chose a specific organization, the United States Air Force, in which to trace the process. We refer to the information product perspective (Wang, 1998; Wang, Lee, Pipino and Strong, 1998) to guide tracing information relevant to all physical products, parts, and work activities involved.

Research on remanufacturing has been conducted to find solutions and strategies for operational problems at hand. The research conducted, particularly under the rubric of the LSI at MIT, offers useful perspectives on understanding the complex processes involved and the various operational problems and solutions (LSI 2004, Millard and Lavoie 2000, Tsuji 1999). We have not found, however, any research that focuses on fundamental treaties of remanufacture, including, in particular, research that covers the importance of information.

Our particular purpose in mapping out the remanufacture process is to understand the characteristics of any discrepancies between the available information and information needs. We will then be able to determine the required characteristics of information that should be embedded in the information for remanufacturing. We focus in this study on the central importance of

[17] Yang Lee, Thomas Allen, and Richard Wang are the lead authors for this case vignette. The authors are from Northeastern University, MIT and Boston University respectively.

information for sustainability. Far too often the information process necessitated in manufacture and remanufacture is treated in a secondary or subsidiary manner relative to the processing of the physical product itself. We believe this to be a serious mistake. The processing of information is central to the process of manufacture and is possibly even more critical to remanufacture. We show the importance of information in remanufacture by tracking and conceptualizing the hidden or missing links that information provides. Information, when designed and used properly, can link the movement of physical products and work activities involved in remanufacture.

Our research is at an initial stage and will require completing data collection and verifying conflicting data from the field interviews. Upon completion of our research, we aim to show a clear picture of the entire remanufacture process and the nature and various roles of information involved in the process. We will then be able to determine the required information products for the remanufacture process for an aircraft fuel-pump. We believe that tracing one specific part through remanufacturing in one organization will pave the way for understanding the information needs in the manufacture and remanufacture processes.

THE VIEW FROM THE FIELD: SOURCES OF “DIRTY” DATA

Based on our initial observations from field interviews, two related areas need further investigation in order to identify the sources of poor quality data. One is obtaining quality data for effectively predicting the need for parts; the other is effectively providing and recording work activities performed on the parts and in other remanufacture processes.

Unlike initial manufacture, where all of the parts needed to assemble a product are known well in advance, remanufacture has far less predictability. Instead, remanufacture involves many unscheduled, variable, and evolving activities. Much of the uncertainty in the process stems from the fact that there are two possible supply chains. One is similar to that found in the initial manufacture, in which new parts are fabricated and delivered by suppliers internal or external to the organization. Unlike initial manufacture, however, this is not the only source of parts. A second “supply line” delivers the parts that are contained in the “carcass,” or product that is to be repaired. Particularly, the unpredictable quality of the parts contained in the carcass that is the major source of uncertainty. Not knowing whether the parts delivered from the carcass are workable or not makes the need for additional parts through the normal supply chain unpredictable. It follows that a way to reduce this uncertainty is to find better ways to predict the state of the parts contained in the carcass. The predictive capability of these models is, of course, highly dependent upon the quality of the stored information. It is the interaction of the two supply chains that makes remanufacture the complex setting. This is where understanding the information process becomes critical.

Our interviews with those involved in the overhaul process lead us to believe that there is much that can be done to improve the prediction of parts that will be needed. The principal complaint voiced in interviews had to do with data quality. We were told that the current models were unable to accurately predict parts needs because the data on which they are based are faulty and questionable. To describe this, the term “dirty data” is used. Some data that are the inputs to the predictable model contain serious errors. The question then becomes, where and how do these errors enter into the information process? Some have suspicions about how past demands and future predictions are calculated, to state a few. These suspicions have never been tested to check their validity.

In our research, we chose to trace the fuel booster pump. The pump, as shown in Figure 8, plays a key role in the maintenance and improvement of mission capability and aircraft flying hours. In this research, we trace in detail the repair of the pump, in relation to the aircraft remanufacture managed by the airline.

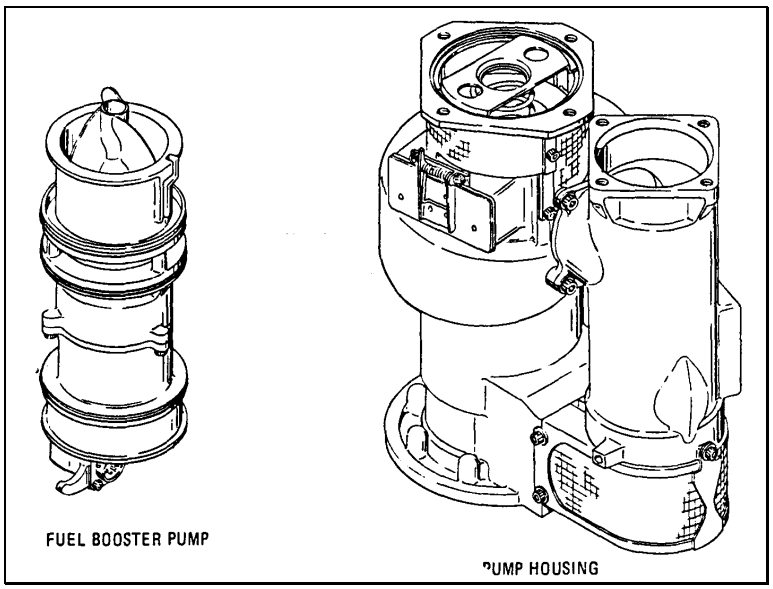

Figure 8: Fuel Booster Pump and Pump Housing

Based on our initial field interviews and document review, we hypothesized that the root cause of problems with the fuel pump is the stator. Therefore, we also traced the stator flow in detail. In so doing, we documented the work roles related to the pump and stator. An exploded view of the stator position in the fuel booster pump is shown in Figure 9.

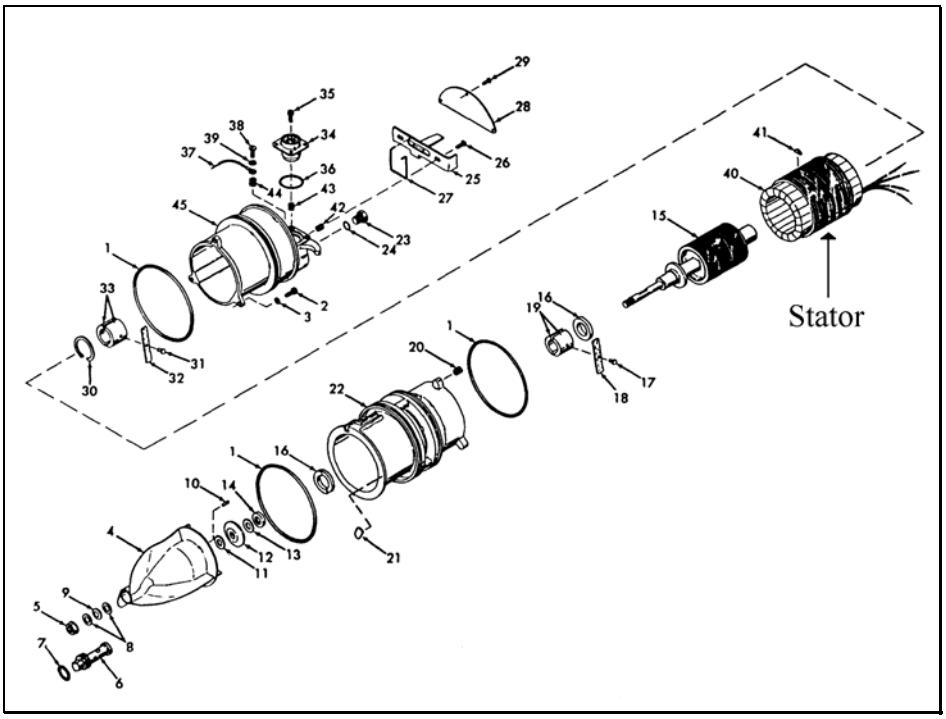

Figure 9: An Illustrative Stator Position in the Fuel Booster Pump, Exploded View

Pump repair is performed in two geographically dispersed places: depots and fields. Depots conduct regular scheduled overhaul, whereas fields handle surprises, the immediate problems at hand. Throughout the repair process, information about the work process and the physical

products or parts are isolated from each other by operational procedures. The direct impact is that it becomes difficult to connect the two kinds of information. One needs the ability to retrieve and understand the physical parts as well as the work information. For example, when a repairperson sees a pump needing repair, the repair history is not easily accessible. As such, the repair history, the supply information, and the conformance-testing information is stored and used separately. Most of the relevant information is stored and categorized meticulously, but without consideration of cross-area retrieval and access. The connection between physical parts and process information part is missing. Currently, one has to contact multiple agents and places over phone and email to track down the information needed to make this connection. We view that this observation can be an input for designing certain information products for remanufacture.

We observe yet another area for improvement. A supply vendor initially produced the engineering specification of the stator, for the pump. We encountered some opinions that the engineering specifications were not consistent with the stators manufactured and delivered to the Air Force (AF). After going through revisions, the updated specification document and drawings were not stored most effectively by AF and the vendor. In the process, different people could develop different understandings of what the official engineering specifications for a stator should be. Meanwhile, the aircraft has to fly. Some work-arounds using parts of questionable quality might have been performed to meet the demand. In short, the lack of management of data products (in this case, the blue prints of the stator) led to a possible lack of quality in physical products. We hypothesize that changes in engineering specifications over time have been poorly communicated between AF and vendors in terms of specific design problems and resolutions.

INFORMATION PRODUCTS FOR AIRCRAFT FUEL-PUMP REMANUFACTURING

Viewing information as a product implies two essential information management requirements. For historical and future-use requirements, information must be stored and protected against undesired change. For current use, information must be kept as current as possible. Information stored in databases is typically safeguarded to preserve these two aspects of quality among others.

As a first step toward solving the problem of dirty data, we have traced the process of remanufacturing fuel-pumps from the time that they are removed from an aircraft, through inspection, repair, and remanufacture, to re-installation. We fully recognize that every part is unique, as is every organization in the remanufacture business. Different parts in different organizations will not undergo the same process. Nevertheless, we believe that there will be some common elements across both parts and organizations. A thorough understanding of how one part in one organization is handled will enable us to ask the right questions as we extend the study to other parts and other organizations.

Based on our preliminary work. We identify four types of information managed in the remanufacture process of the fuel-pump: 1) blueprints for manufacturing parts and products involved, 2) conformance lists for testing performance of new and reconditioned parts and products, 3) plans for supply schedules, and 4) work records such as repair activities on parts and components. All of these types of information have various life cycles and transfer routes. This variety of information is represented in different forms, processed by different agents, and interfaced with different computer systems. In short, remanufacture demands managing information that resembles what archeologists wish to have when they investigate an archeological site: perfect visibility with all historical integrity attached.

DISCUSSION

We believe that information product integrates necessary physical products and work processes. Other research shaped our views on information products for remanufacture. The research and our interpretations are summarized below.

Mead's (1934) classical premise of a disjunction between human actions and human grasp of actions raises the question of quality of data that can be the representation and manifestation of reconstructed human actions. Von Hipple (1994) conceptualized a reason for costly transfer of certain information, useful for innovation, as "sticky" information. Allen (1977) demonstrated that "gatekeepers" can play an important role in the transfer of technical information and thus impacting the technology acquisition and dissemination. Schon and Rein (1994) also emphasized the criticality of problem framing that can make a considerable consequences for the nature and type of searching for solution information. Wand and Wang (1996) explained the difference between real-world situation and stored information as data quality problems, using an ontological perspective. Madnick [2000 context interchange] identified a stream of data quality problems that arise from transferring data from one context and using it in another (different) context. He suggested their reconciliation with "Context Interchange" technology. Strong, Lee, and Wang (1997) explored how specific characteristics of data quality problems are changed as data are transferred from one locale to another. Huang, Lee, and Wang (1999) suggested examples of information products such as eye-glass prescriptions. Davidson and Chun (2000) reported a preliminary methods for mapping information products.

Characteristics of how information integrates physical artifacts and activity process determine the kinds and quality of information product. The quality of information reveals how effectively and efficiently planning and implementation of such integration is performed. We believe that remanufacture process lends itself as useful setting for studying the complex and detailed intricacies involved in information product and its performance.

V. SUSTAINABILITY, EFFICIENCY, UNCERTAINTY, AND ADAPTATION

The literature on technology policy emphasizes the use of optimization methods to get policies right initially (Morgan 1990), but unanticipated technical advances, complex side effects, and unexpected societal responses often undercut forecasting. As a consequence, policy choices or institutional responses will typically require continuous adjustment and revision. The focus here on sustainability as an organizing design principles also calls for adaptive policy systems that are responsive to information on side benefits and costs, mitigation choices, and constraints on policies. Examples of work to facilitate effective public and private sector adaptation include:

- Broadening the scope of information acquisition and review to permit earlier detection of side effects
- Establishing independent units for reevaluation and reassessment of corporate strategies or public policies
- Analyzing retrospective examples of successful and unsuccessful business and government adaptation

UNCERTAINTY AND INEVITABLE, UNEXPECTED SIDE BENEFITS

Consider three examples of unexpected possible perverse interaction effects grounded in atmospheric chemistry, in engineering, and in economics, with varying degrees of uncertainty over the strength of effects, the specific mechanisms generating these effects, and the terms of tradeoffs generated by these effects. Each possible interaction effect has been recognized within the worlds of science, engineering, and the social sciences, but policy has been modified to take account of only one of the problems.

Unexpected Effects: Atmospheric Chemistry. Nitrous oxide (NOx) scavenging and ozone oroduction: There is evidence of an increasingly strong "weekend effect" in Los Angeles. Ozone levels on weekends are higher than on weekdays, even though emissions of ozone precursors from mobile sources are lower. In the LA basin, thirty years of stringent regulation have succeeded in driving down emissions of ozone precursors, with VOCs reduced proportionately more than NOx. In such a VOC-limited environment, additional reductions in emissions of NOx may have the perverse effect of increasing rather than decreasing peak ozone production. Although not conclusive, the existence of the weekend effect suggests that policies to expand use of ZEVs and mandate technologies to further reduce NOx emissions from cars may have the perverse effect of raising ozone levels. Although the existence of the weekend effect is now recognized, uncertainty over mechanisms persists and the policy implications associated with this problem have not been adequately probed (Foster 2000).

Unexpected Effects: Engineering and Technology. Fuel characteristics and auto emissions: The deleterious effects of sulfur in fuels on auto and truck emissions have been recognized since the 1960s. Two contrasting points emerge. First, the policy response has been fragmented and slow. Historically, the benefits of investments in cleaner cars were not exploited efficiently through corresponding changes in composition of fuels. Installation of advanced three-way catalysts without removal of sulfur from fuels may have had the perverse effect of increasing emissions of the greenhouse gas nitrous oxide. Oxygen sensors used by new onboard diagnostic systems (OBD II) may be poisoned by high sulfur fuels, with false sensor readings leading to inappropriate fuel-air mixtures and lower combustion efficiency. Taken in light of these effects on automotive equipment, recently mandated reductions in gasoline sulfur content appear highly desirable. Second, debate has now turned to tightening targets from 30 ppm to 5 ppm of sulfur or lower. The effects of further tightening fuel standards on air quality are not well understood. Possible side

effects associated with changes in industrial structure of refining, the effects of refining capacity and transportation grids on the timing and extent of simultaneous reductions in sulfur, elimination of MTBE and potential adjustments in oxygenate standards, and perverse side effects associated with VOC reductions should be considered. But information on these factors is limited.

Unexpected Effects: Economics and Prices. New car emissions and old car retention: Passenger cars now produce less than 15 percent of all smog precursor emissions, with older cars producing the vast majority of auto emissions. This places a limit on the potential maximum effect of reductions in new car emissions and underscores the importance of increasing fleet turnover. However, policies to further reduce emissions from new cars, including ZEV mandates, may raise the price of new cars, reduce fleet turnover, and encourage retention of older cars. The benefits of lower new car emissions may come at the price of higher emissions from a larger fleet of older cars. These general effects of quality on pricing and fleet turnover are recognized, but information on the terms of tradeoffs is lacking. Present policies in the United States and abroad do not take these effects into account. The MIT Mexico City group plans to examine the implications of this interaction effect and to develop a leasing and financing plan to improve regional air quality by accelerating fleet turnover, and parallel inquiry into measures within the United States may be appropriate.[18]

TACTICAL AND OPERATIONAL IMPLICATIONS: FIX THE SPECIFIC PROBLEM

Ex poste, the challenge is to devise specific fixes for specific problems. For example, financing packages and adjustments to new car performance standards may combine to improve fleet turnover and thereby improve air quality as discussed in the Mexico City proposal. US fuel standards now take account of fuel-auto emissions interaction problems, albeit with debate over the duration of the phase in period and the continuation of inappropriate testing and certification methods. The NOx scavenging problem presents greater difficulties. Although joint standard setting on stationary as well as mobile sources to take account of the effects of ozone disbenefits would be desirable, there may not sufficient information to formulate appropriate policies to deal with the weekend effect and other VOC and NOx limited environments. It is important to note that responding to emerging problems in a piecemeal manner can provide, at best, short-term remedies for problems identified after the fact. These short-term remedies may be no more or no less vulnerable to problems of diminishing returns and of emerging interaction effects than the policies that they replace.

STRATEGIC IMPLICATIONS: DESIGNING POLICIES TO GENERATE AND USE INFORMATION

Ex ante, the first challenge centers on designing policies in a Bayesian decision analytic sense, with explicit attention to how policies may reduce uncertainty by generating useful information. Actions should be viewed in part as experiments that yield information on key scientific, engineering, and economic sources of uncertainty.

Ex ante, the second challenge centers on ways of altering information flows and decision-making processes to improve regulatory outcomes. The problem is to create incentives for public and private actors to acquire information to reduce critical areas of uncertainty, to design policies to hedge against irreducible uncertainties, and to improve the capacity of decision-makers to adapt more readily to emerging information even after policies are in place.

First, credible scientific, technical, and economic information useful for decision making may not exist. For example, current EPA mandated testing, monitoring, and modeling programs do not

[18] For methods of accelerating fleet turnover, see MIT CEC Mexico City Report.

generate the information needed to address questions central to improving regulations in this domain. How much have cleaner cars contributed to cleaner air? How much has dirty gas limited the benefits of clean cars? What effects have reformulated gasoline had on air quality? How do costs of eliminating the oxygenate mandate compare with benefits of reducing the sulfur content of gasoline more rapidly? What are the tradeoffs between emissions reductions from mobile and nonmobile sources? *The key issues here are to assess what is known, to reduce disincentives that may discourage government, industry, and NGOs from gathering and/or transferring information that bears on regulatory choices, and to establish more timely and credible mechanisms for evaluating relevant information.*

Second, legislative and judicial restraints on updating, appraising, and modifying regulations in light of information often hinder constructive adaptation. As we continue with evaluation of Tier II standards and move to consideration of possible post Tier II standards, a major challenge centers on these regulatory and institutional design issues. The lag between recognition of potential problems such as the weekend effect or the sulfur-catalyst interaction problem by scientists, engineers, and policy analysts and appropriate regulatory responses is too long. Furthermore, recent judicial actions have reinforced walls between compartments, limiting the authority of EPA and other regulators to break across categories established by legislation. *The key issues here are to design policies that hedge against irreducible uncertainties and to design policy-making institutions that adapt more effectively to information that becomes available after initial decisions are made*.

VI. CONCLUSION

This chapter has argued for sustainability as an organizing principle for large engineering systems. We espouse a broad view of sustainability herein—including environmental issues, economic development issues, equitable distribution of economic gain and environmental pain, and institutional considerations. Achieving sustainability requires us to change the way engineering is practiced and to change engineering education so that new professionals will have a deep understanding of sustainability concepts. That sustainability is important seems to the authors to be beyond question, but we further assert it as an *organizing principle*, a concept around which the design of CLIOS with important socio-technical aspects be structured.

CLIOS are joined by many other methods for assessing sustainability, including modeling, optimization analysis, case studies, and others. One key aspect of all methods for assessing sustainability is that the empirical evidence accumulates over long periods of time and full understanding may only be achieved on a retrospective basis.

To illustrate the range of issues that are considered within sustainability, we developed four vignettes. We discussed Mexico City and its air-quality issues as a complex engineered system and highlighted the multidimensionality of sustainability. We considered the Ford Motor Company's development of a new manufacturing facility, which illustrates how the private sector can take the lead in sustainability as well. The Lean Sustainment Initiative with the United States Air Force illustrates how a geographically diverse air system, coupled with the sustainment of assets (airplanes) that are operating well beyond their design life, can be achieved while adhering to lean principles. The automotive aluminum vignette gives insight into the various levels of analysis at which sustainability can be considered and how those levels relate to each other.

So we propose sustainability as an organizing principle and illustrate the breadth of what is captured in the modern concept of sustainability. We hope this chapter makes the case to the satisfaction of the reader and further illustrates how a combination of public policy and private-sector strategies can interweave to create a sustainable society.

Critical challenges remain, of course. The notion of trading off short-term goals and constraints with the longer-term strategic concept of sustainability is difficult in practice. For example, if the public sector continues to award contracts to low bidders with short-term perspectives, rather than companies that take the longer and sustainable view, sustainability will be difficult to achieve. If we fail to educate new engineers to appreciate sustainability, and if current professionals do not take a broader view of engineering system design, achieving sustainability will be difficult indeed.

Nonetheless, we are optimistic about the future. The very appearance in an engineering system design monograph of a chapter like this, supported by substantive cases illustrating the concept of sustainability, would have been unthinkable a decade ago. We have made some important first steps, but much remains to be done.

VII. REFERENCES

Allen, T. J. 1977. *Managing the Flow of Technology*. Cambridge, Mass.: The MIT Press.

Ashford, N. A., Hafkamp, W., Prakke, F., & Vergragt, P. 2002. "Pathways to Sustainable Industrial Transformations: Cooptimising Competitiveness, Employment, and Environment." Copyright © 2002 by Nicholas Ashford.

Bertsimas, D. and J.N. Tsitsiklis, Introduction to Linear Optimization. 1997: Athena Scientific.

Bull, H. 1977. *The Anarchical Society*. London: Macmillan.

Caid, N., Crist, P., Gilbert, R., and Wiederkehr, P. 2002 Environmentally Sustainable Transport: Concept, Goal and Strategy—the OECD's EST Project. *Proceedings of the Institute of Civil Engineers, Transport* 153(4):219-226.

Cosquer, A. (2003), Optimizing the Reuse of Light Metals From End-of-Life Vehicles, MIT Master's Thesis, Technology Policy Program, 2003

Cosquer, A. and R. Kirchain (2003), "Optimizing the Reuse of Light Metals From End-of-Life Vehicles: Lessons from Closed Loop Simulations", Proceedings of the Annual Meeting of the Mining, Metals, and Minerals Society, San Diego, CA, April 2003.

Davidson, B., and A. T. Chun. 2000 Developing a Data Production Map to Identify Data Quality Problems. Paper read at the 5th International Conference on Information Quality. Cambridge, Mass.

Dodder, R., J. Sussman, and J. McConnell. 2004. The Concept of a "CLIOS Analysis" Illustrated by the Mexico City Case. Paper presented at MIT Engineering Systems Division Internal Symposium, March 2004 at Cambridge, Mass.

Durning, A. T. 1994. The Conundrum of Consumption. In *Beyond the Numbers: A Reader on Population, Consumption and the Environment*, edited by Laurie Ann Mazur. Washington, D.C.: Island Press.

European Conference of Ministers of Transport (ECMT). 2001. Implementing Sustainable Urban Travel Policies: Final Report. OECD Publications Service, Paris, France.

Ford Motor Company. 2002. Corporate Citizenship Report.

Foster, James. 2000. A Preliminary Review of the Weekend Effect. Research Memorandum.

Frosch, R. A. and N. E. Gallopoulos (1989), "Strategies for Manufacturing", Scientific American, September 1989, pp. 144-152.

Fruehan, RJ, O. Fortini, H.W. Paxton, R. Brindle, (2000), "Theoretical Minimum Energies To Produce Steel for Selected Conditions", USDOE, Office of Industrial Technologies, Washington DC, May 2000.

Gorban, L.R., G.K. Ng, and M.B. Tessieri, An In-Depth Analysis of Automotive Aluminum Recycling in the Year 2010. Society of Automotive Engineers (SAE) Transactions: Journal of Materials & Manufacturing (USA), 1994.

Hall, R. P. 2002. Introducing the Concept of Sustainable Transportation to the U.S. DOT through the Reauthorization of TEA-21. Masters thesis. Technology and Policy Program at Massachusetts Institute of Technology, Cambridge, Mass..

Hall, R. P., and J. M. Sussman. 2003. Sustainable Transportation: A Strategy for System Change. Unpublished Manuscript. Massachusetts Institute of Technology.

Hotelling, H. (1931), "The Economics of Exhaustible Resources", Journal of Political Economy, v.39, n 2, April 1931, pp 137-175.

Huang, K., Y. Lee, and R. Wang. 1999. *Quality Information and Knowledge*. Upper Saddle River, N.J.,: Prentice Hall.

Keolian, Geogory A., Kar, K., Manion, M., and Bulkley, J.(1997), Industrial Ecology of the Automobile: A Life Cycle Perspective, Society of Automotive Engineers, Warrendale, PA, 1997.

Kidder, R.M. 1990. Perspectives: The Three E's of the 1990s. *Christian Science Monitor*. The Christian Science Publishing Society, http://www1.umn.edu/humanrts/edumat/sustecon/scans/1-1.gif.

Lloyd, S. 2002. Complex Systems: A Review. Paper presented at MIT Engineering Systems Division Internal Symposium, May, at Cambridge, Mass.

Meadows, D. H., D. L. Meadows, J. Randers, and W. W. Behrens. 1972. *The Limits to Growth*. Potomac Associates.

Meadows, D. H., D. L. Meadows, and J. Randers. 1992 *Beyond the Limits: Confronting Global Collapse, Envisioning a Sustainable Future*. Vermont: Chelsea Green Publishing Co.

Meaows, D. and J. Randers (1992). Beyond the Limits: Confronting Global Analysis, Envisioning a Sustainable Future, Chelsea Green Publishing Company, Post Mills, Vt. 1992.

Meadows, D. and J. Randers (1972). The Limits to growth. Universe books, New York. 1972.

Madnick. 2000.

Marks, D. H. 2002 The Evolving Role of Systems Analysis in Process and Methods in Large-Scale Public Socio-Technical Systems. Paper presented at MIT Engineering Systems Division Internal Symposium, 29-30 May, at Cambridge, Mass.

Mead, G. H. 1934. *Mind, Self, and Society*. Chicago, Ill.: University of Chicago Press.

Millard, F., and M. Lavoie. 2000. Developing Data Product Maps for TDQM: The Case of Georgia Vital Records. Paper presented at the Conference on Information Quality, at the Massachusetts Institute of Technology, Cambridge, Mass..

Luisa T. Molina and Mario J. Molina, Eds., *Air Quality in the Mexico Megacity: An Integrated Assessment*, Kluwer Academic Publishers, Boston, 2002

Morgan. 1990.

Murman, Earll, Tom Allen, Kirkor Bozdogan, Joel Cutcher-Gershenfeld, Hugh McManus, Debbie Nightingale, Eric Rebentisch, Tom Shields, Fred Stahl Myles Walton, Joyce Warmkessel, Stanley Weiss, and Sheila Widnall. 2002. *Lean Enterprise Value: Insights from MIT's Lean Aerospace Initiative*. New York: Palgrave/Macmillan.

Schön, D., and M. Rein. 1994. *Frame Reflection*. New York: Basic Books.

Solow, R.M.(1974), "The Economics of Resources or the Resources of Economics", The American Economic Review, vol 64, issue 2 – Papers and Proceedings of the 86th Annual Meeting of the American Economic Association, May 1974, pp 1-14.

Sterman, J. 2002. System Dynamics: Systems Thinking and Modeling for a Complex World, Paper presented at MIT Engineering Systems Division Internal Symposium, 29-30 May,, at Cambridge, Mass.

Strong, D. M., Y. W. Lee, and R. Y. Wang. 1997. Data Quality in Context. *Communications of the ACM* 40(5):103-110.

Stubbles, J (2000), "Energy Use In The U.S. Steel Industry: An Historical Perspective And Future Opportunities", USDOE, Office of Industrial Technologies, Washington DC, September 2000.

Sussman, J. 2000. *Introduction to Transportation Systems*. Norwood, MA: Artech House.

Sussman, J. 2002. Collected Views on Complexity in Systems. Paper presented at MIT Engineering Systems Division Internal Symposium, 29-30 May,,at Cambridge, Mass.

Sylvester, Ted. 2003. The Greening of the Rouge: Ford Motor Co. Revitalized Aging Brownfield.

Turner, R. Kerry, Pearce, D., and Bateman, I. (1993), Environmental Economics: An Elementary Introduction, The Johns Hopkins University Press, Baltimore, MD, 1993.

Tsuji, L. C. 1999. Tradeoffs in Air Force Maintenance: Squadron Size, Inventory Policy, and Cannibalization. Masters thesis. Massachusetts Institute of Technology, Cambridge, Mass.

von Hippel, E. 1994. "Sticky Information" and the Locus of Problem Solving: Implications for Innovation. *Management Science* 40(4):429-439.

Walton, Richard, Joel Cutcher-Gershenfeld, and Robert McKersie. 1994. *Strategic Negotiations: A Theory of Change in Labor-Management Relations*. Boston, Mass.: Harvard Business School Press.

Wand, Y., and R. Y. Wang. 1996. Anchoring Data Quality Dimensions in Ontological Foundations. *Communications of the ACM* 39(11):86-95.

Wang, R. Y. 1998. A Product Perspective on Total Data Quality Management. *Communications of the ACM* 41(2):58-65.

Wang, R. Y., Y. L. Lee, L. Pipino, and D. M. Strong. 1998. Manage Your Information as a Product. *Sloan Management Review* 39(4):95-105.

Lean Sustainment Initiative (LSI). 2001. Lean Sustainment Initiative Website. Found at http://www.leansustainment.org/.

Womack, James P., Daniel T. Jones, and Daniel Roos. 1990. *The Machine That Changed the World*. New York: Rawson Associates.

Womack, James P., and Daniel T. Jones. 1996. *Lean Thinking*. New York: Simon & Schuster.

World Commission on Environment and Development (WCED). 1987. *Our Common Future*. New York: Oxford University Press.